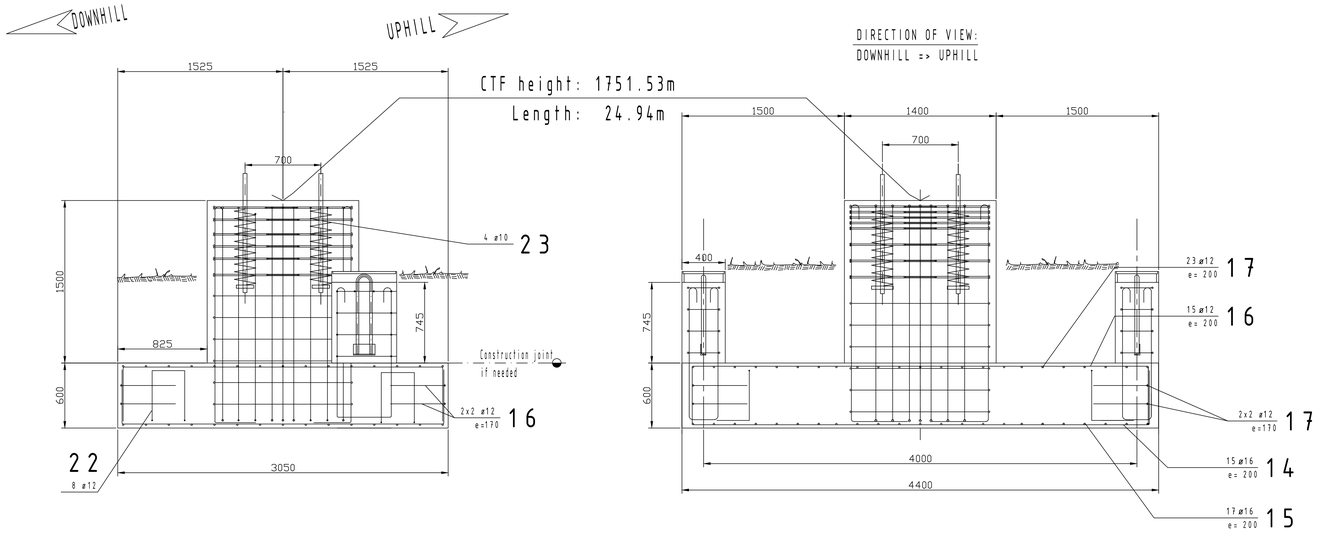

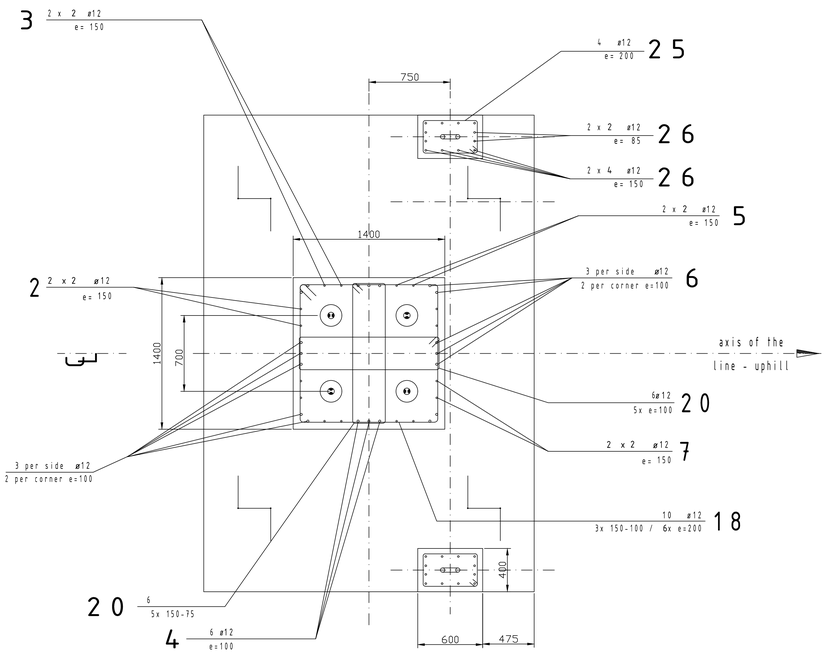

Shape	Item	Piece	ø[mm]	length	weight
200 500 1950	1	7	12	2.65 m	15 kg
200 500 1950	2	6	12	2.65 m	13 kg
200 500 1950	3	4	12	2.65 m	9 kg
200 500 1950	4	6	12	2.65 m	13 kg
200 500 1950	5	4	12	2.65 m	9 kg
200 500 1950	6	7	12	2.65 m	15 kg
200 500 1950	7	4	12	2.65 m	9 kg
500 4250 500	14	15	16	5.25m	199 kg
500 2900 500	15	17	16	3.90 m	166 kg
500 4250 500	16	19	12	5.25 m	80 kg
500 2900 500	17	27	12	3.90 m	84 kg
1300 150 1300 150 1300 1300	18	12	12	5.50 m	56 kg
1300 150 300 300 1300	20	12	12	3.50 m	39 kg
500 500	22	8	12	1.70 m	11 kg
6 200 185x=1884	23	4	10	5.65 m	28 kg
	24	2	35	ITEM 24 DELIVERY BY SUPPLIMAYR	
150 300 150 500	25	8	12	1.90 m	13 kg
150 150 1200	26	16	16	1.50 m	18 kg
TOTAL WEIGHT: 743 kg					

Instructions f. bending of hooks 90°:

Representation of bending form: | Infructions f. bending:

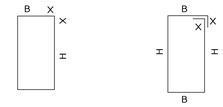

X...standard hook length
B...width of hook
H...height of hook

Design bent hooks as standard hooks

Instr. f. bending of struct. steel 550 as per ÖNORM EN1992-1-1, 8.3:

End hook: | Bent hook 150°: | Bent hook 90°: | Loop:

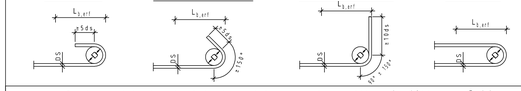

Bends, end hooks, bent hooks and loops on bars with: ds≤16mm.....D≥4ds
ds≥20mm.....D≥7ds

Bending up: | Hook addition: | Bending around a bar of at least the same thickness: | Sling:

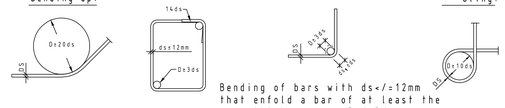

Bending of bars with ds</=12mm that enfold a bar of at least the same thickness.....D>/=3ds.

Australia

Concrete grade: N32 Min. cube compressive strength 28 days: 32 N/mm² | frost-resistant, max. ag size 20mm

REINFORCEMENT: Ribbed concrete steel, yield point 500N/mm² - 500plus

In case of transversal ground slopes, use lean concrete down to frost-proof depth.

MAXIM. EXISTING CONTACT PRESSURE: 200 kN/m²

In case of inadequate or difficult soil conditions, e.g clay or sliding ground, a specialist for soil mechanics is to be consulted. Leave construction joint surfaces and inner surfaces rough

All elevations have to be checked on site!
Minimum concrete cover 50mm base and 32mm columns
All exposed corners to have a 20mmx20mm chamfer
All dimensions in mm do not scale.

Remarks:

The company executing the works is obliged to point out any inconsistencies between this drawing, the architect's drawings or drawings of other expert engineers resp. the local conditions on the constructions site.

ATTENTION:

A suitably experienced and qualified engineer is required to inspect the foundation material during construction and verify that an allowable bearing pressure of not less than 200kN/m² is achieved.

IMPORTANT:

The drawing is only schematic!
Only the dimensions are applicable!

Vcoulmn= 3.4 m³
Vbase= 8.1 m³
Vhold=0.4 m³
Vtotal=11.9 m

IMPORTANT-Take into account the geotechnical engineering assessment when executing the construction works of the foundation!

ENSURE FOUNDATION HAS EARTH BONDING

The foundation must be completely back-filled in equal layers on the entire surface below the CTF height.
The backfill load was considered in the calculation. - specific weight 16 kN/m³

DISTANCE CTF TO GROUND: 610 mm

If the weight of backfill cannot be carried out in the hereby specified size, the load must be applied in a different way (e.g. concrete load)

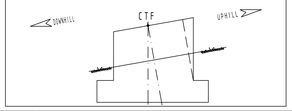

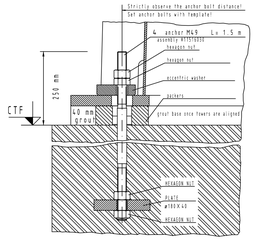

IMPORTANT!
The anchors must be imbedded in concrete exactly parallel to each other and at right angle to the top foundation. Anchor bolts must NOT be welded nor tacked (risk of fracture).

After tower GROUTING, pre-tension anchor bolts hydraulically:

anchor M49 - 500 kN

4 anchor M49 delivery Doppelmayr
+ template for concrete work

Left Installation 0deg INCLINATION

The foundations must be surveyed in terrain exactly according to the specified CTF heights and lengths.
CTF-length: ± 50 mm, CTF-HEIGHT: ± 30 mm , Cross width: ± 20 mm , angle: ± 0.5° .
N.B.: The foundation dimensions are absolute minimum requirements!

Index	Revision	Date	Name	Configuration	ID NO.

Doppelmayr® Innova Patent GmbH Rickenbachstr. 8-12 A-6960 WOLFURTWESTRIA

G-Class: 0

Scale 1:20 Paper: A-3N

	Date	Name
Drawn	27/10/2020	Jet
approved		
Sheet		

Installation: GUTHRIES DOUBLE CHAIR
Order: 2020-15 Place: X

gross weight kg

=Plotart=

TUBULAR TOWER FOUNDATION NO.: 1
Shaft length 3.09m
Gauge 4.00m

Original drawing no. ID NO.

Depot NO. NO. 2020-15-C-005 Index A

This drawing is intellectual property of DOPPELMAYR Australia pty.ltd and must not be copied nor utilised in whole or in part without permission and is subject to return upon request.

A0

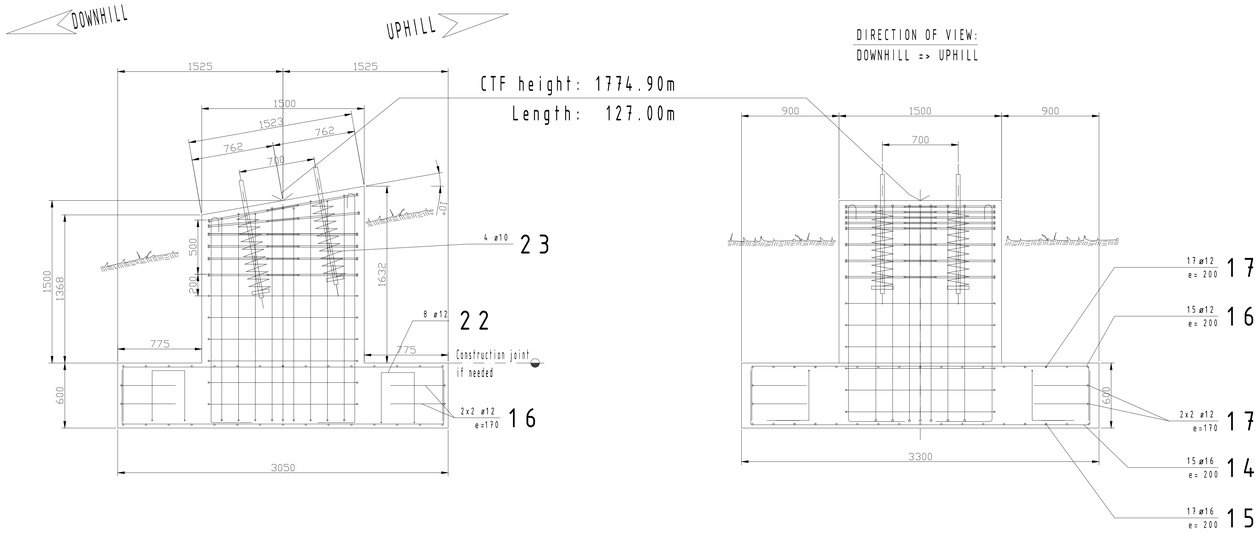

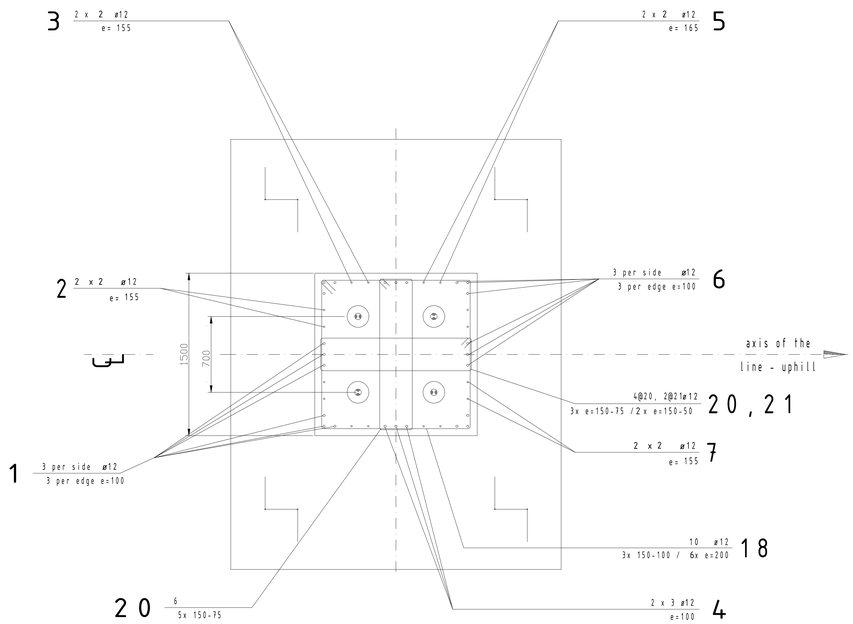

Shape	Item	Piece	ø[mm]	length	weight
200 1850 500	1	9	12	2.55 m	19 kg
200 1850 500	2	6	12	2.55 m	13 kg
200 1900 500	3	4	12	2.60 m	9 kg
200 1950 500	4	6	12	2.65 m	13 kg
200 2000 500	5	4	12	2.70 m	9 kg
200 2050 500	6	9	12	2.75 m	20 kg
200 2050 500	7	4	12	2.75 m	9 kg
500 3150 500	14	15	16	4.15 m	156 kg
500 2900 500	15	17	16	3.90 m	166 kg
500 3150 500	16	19	12	4.15 m	63 kg
500 2900 500	17	21	12	3.90 m	65 kg
1390 1390 150 150 1390	18	10	12	5.86 m	47 kg
1390 1410 150 150 1390	19	2	12	5.90 m	10 kg
300 1390 150 150 1390	20	10	12	3.68 m	30 kg
300 1410 150 150 1410	21	2	12	3.74 m	6 kg
500 250 250 500	22	8	12	1.70 m	11 kg
6 200 150x=1501	23	4	10	5.65 m	28 kg
TOTAL WEIGHT:				668 kg	

Instructions f. bending of hooks 90°:

Representation of bending form:

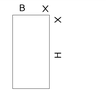

Intructions f. bending:

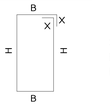

X...standard hook length
B...width of hook
H...height of hook

Design bent hooks as standard hooks

Instr. f. bending of struct. steel 550 as per ÖNORM EN1992-1-1, 8.3:

End hook: Bent hook 150°: Bent hook 90°: Loop:

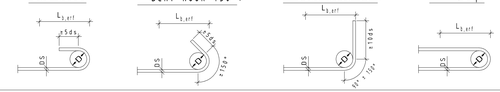

Bends, end hooks, bent hooks and loops on bars with: ds≤16mm.....D≥4ds
ds≥20mm.....D≥7ds

Bending up: Hook addition: Bending around a bar of at least the same thickness: Sling:

Bending of bars with ds</=12mm that enfold a bar of at least the same thickness.....D>/=3ds.

Australia

Concrete grade: N32 Min. cube compressive strength 28 days: 32 N/mm² frost-resistant, max. ag size 20mm

REINFORCEMENT: Ribbed concrete steel, yield point 500N/mm² - 500plus

In case of transversal ground slopes, use lean concrete down to frost-proof depth.

MAXIM. EXISTING CONTACT PRESSURE: 200 kN/m²

In case of inadequate or difficult soil conditions, e.g clay or sliding ground, a specialist for soil mechanics is to be consulted. Leave construction joint surfaces and inner surfaces rough

All elevations have to be checked on site!
Minimum concrete cover 50mm base and 32mm columns
All exposed corners to have a 20mmx20mm chanfer
All dimensions in mm do not scale.

Remarks:

The company executing the works is obliged to point out any inconsistencies between this drawing, the architect"s drawings or drawings of other expert engineers resp. the local conditions on the constructions site.

ATTENTION:

A suitably experienced and qualified engineer is required to inspect the foundation material during construction and verify that an allowable bearing pressure of not less than 200kN/m² is achieved.

IMPORTANT:

The drawing is only schematic!
Only the dimensions are applicable!

Vcoolumn= 3.4 m³
Vbase= 6.1 m³
Vtotal=9.5 m³

IMPORTANT-Take into account the geotechnical engineering assessment when executing the construction works of the foundation!

ENSURE FOUNDATION HAS EARTH BONDING

The foundation must be completely back-filled in equal layers on the entire surface below the CTF height.
The backfill load was considered in the calculation. - specific weight 16 kN/m³.

DISTANCE CTF TO GROUND: 680 mm

If the weight of backfill cannot be carried out in the hereby specified size, the load must be applied in a different way (e.g. concrete load)

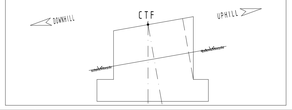

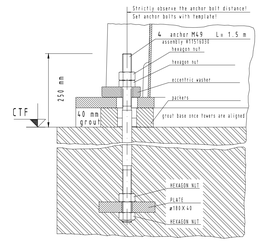

! I M P O R T A N T !
The anchors must be imbedded in concrete exactly parallel to each other and at right angle to the top foundation. Anchor bolts must NOT be welded nor tacked (risk of fracture).

After tower GROUTING, pre-tension anchor bolts hydraulically:

anchor M49 - 500 kN

4 anchor M49 delivery Doppelmayr
+ template for concrete work

Left Installation 10deg INCLINATION

The foundations must be surveyed in terrain exactly according to the specified CTF heights and lengths.
CTF-length: ± 50 mm, CTF-HEIGHT: ± 30 mm, Cross width: ± 20 mm, angle: ± 0.5°.
N.B.: The foundation dimensions are absolute minimum requirements!

Index	Revision	Date	Name	Configuration	ID NO.

Doppelmayr® Innova Patent GmbH Rieckenbachstr. 8-12 A-6960 WOLFURTWESTRIA

G-Class: 0

Scale 1/20 Sector. w EN2 | Drawn 24/09/2020 SHT | approved | SAHEIB

Installation GUTHRIES DOUBLE CHAIR
Order: 2020-15 Place X

gross weight kg

Plot scale =Plotart=

TUBULAR TOWER FOUNDATION NO.: 2
Shaft length 9.32m
Gauge 4.00m

Original drawing no. ID NO.

Drawing NO. NO. 2020-15-C-006 Issue A

This drawing is intellectual property of DOPPELMAYR Australia pty. ltd and must not be copied nor utilised in whole or in part without permission and is subject to return upon request.

A0

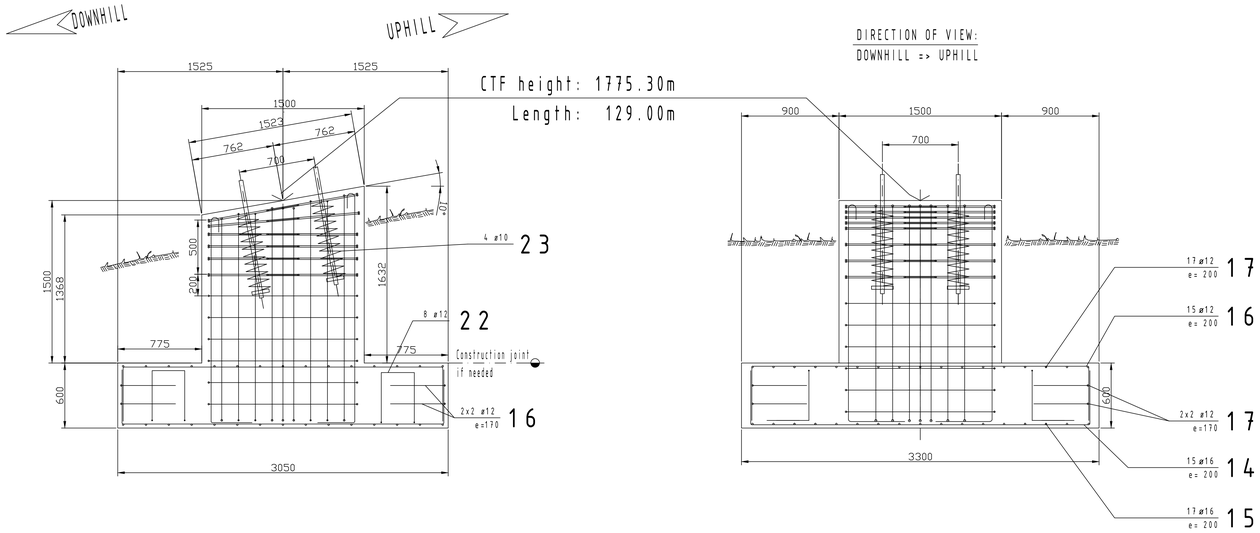

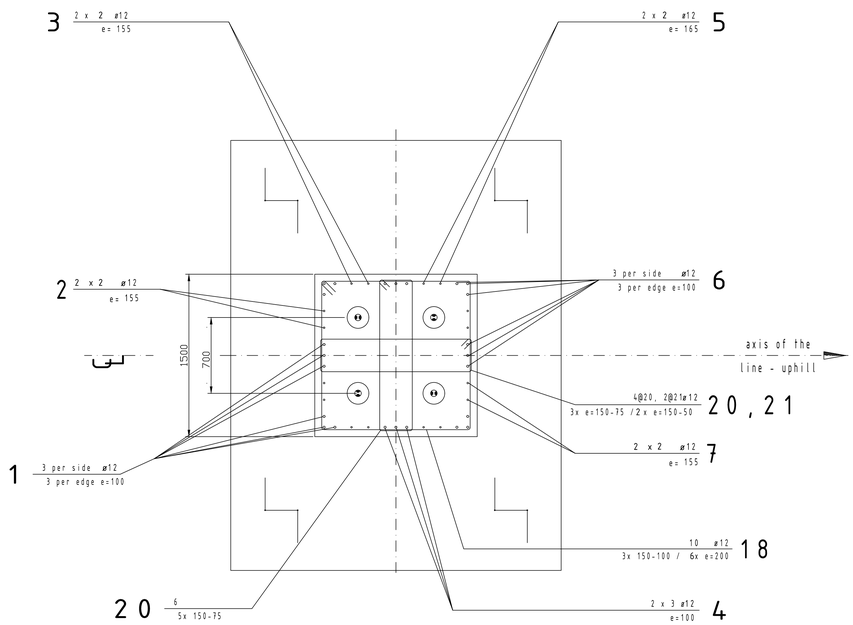

Shape	Item	Piece	ø[mm]	length	weight
200 1850 500	1	9	12	2.55 m	19 kg
200 1850 500	2	6	12	2.55 m	13 kg
200 1900 500	3	4	12	2.60 m	9 kg
200 1950 500	4	6	12	2.65 m	13 kg
200 2000 500	5	4	12	2.70 m	9 kg
200 2050 500	6	9	12	2.75 m	20 kg
200 2050 500	7	4	12	2.75 m	9 kg
500 3150 500	14	15	16	4.15 m	156 kg
500 2900 500	15	17	16	3.90 m	166 kg
500 3150 500	16	19	12	4.15 m	63 kg
500 2900 500	17	21	12	3.90 m	65 kg
1390 1390 150 150 1390	18	10	12	5.86 m	47 kg
1390 1410 150 150 1390	19	2	12	5.90 m	10 kg
300 1390 150 150 1390	20	10	12	3.68 m	30 kg
300 1410 150 150 1410	21	2	12	3.74 m	6 kg
500 25 25 500	22	8	12	1.70 m	11 kg
200 6 185x=1554	23	4	10	5.65 m	28 kg
TOTAL WEIGHT: 668 kg					

Instructions f. bending of hooks 90°:

Representation of bending form: | Intructions f. bending:

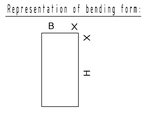

X....standard hook length
B....width of hook
H....height of hook

Design bent hooks as standard hooks

Instr. f. bending of struct. steel 550 as per ÖNORM EN1992-1-1, 8.3:

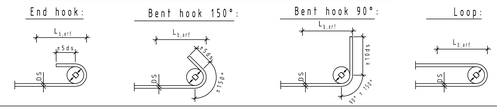

Bends, end hooks, bent hooks and loops on bars with: ds≤16mm.....D≥4ds
ds≥20mm.....D≥7ds

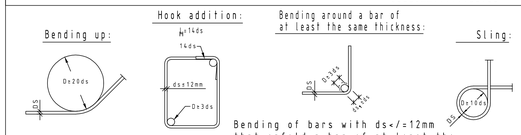

Bending of bars with ds</=12mm that enfold a bar of at least the same thickness.....D>/=3ds.

Australia

Concrete grade: N32 Min. cube compressive strength 28 days: 32 N/mm² | frost-resistant, max. ag size 20mm

REINFORCEMENT: Ribbed concrete steel, yield point 500N/mm² - 500plus

In case of transversal ground slopes, use lean concrete down to frost-proof depth.

MAXIM. EXISTING CONTACT PRESSURE: 200 kN/m²

In case of inadequate or difficult soil conditions, e.g clay or sliding ground, a specialist for soil mechanics is to be consulted. Leave construction joint surfaces and inner surfaces rough

All elevations have to be checked on site!
Minimum concrete cover 50mm base and 32mm columns
All exposed corners to have a 20mmx20mm chamfer
All dimensions in mm do not scale.

Remarks:

The company executing the works is obliged to point out any inconsistencies between this drawing, the architect's drawings or drawings of other expert engineers resp. the local conditions on the constructions site.

ATTENTION:

A suitably experienced and qualified engineer is required to inspect the foundation material during construction and verify that an allowable bearing pressure of not less than 200kN/m² is achieved.

IMPORTANT:

The drawing is only schematic!
Only the dimensions are applicable!

Vcoolumn= 3.4 m³
Vbase= 6.1 m³
Vtotal=9.5 m³

IMPORTANT:Take into account the geotechnical engineering assessment when executing the construction works of the foundation!

ENSURE FOUNDATION HAS EARTH BONDING

The foundation must be completely back-filled in equal layers on the entire surface below the CTF height.
The backfill load was considered in the calculation. - specific weight 16 kN/m³

DISTANCE CTF TO GROUND: 640 mm

If the weight of backfill cannot be carried out in the hereby specified size, the load must be applied in a different way (e.g. concrete load)

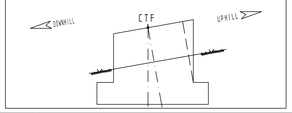

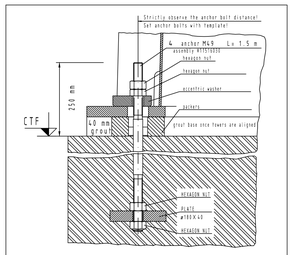

IMPORTANT

The anchors must be imbedded in concrete exactly parallel to each other and at right angle to the top foundation. Anchor bolts must NOT be welded nor tacked (risk of fracture).

After tower GROUTING, pre-tension anchor bolts hydraulically:

anchor M49 - 500 kN

4 anchor M49 delivery Doppelmayr
+ template for concrete work

Left Installation 10deg INCLINATION

The foundations must be surveyed in terrain exactly according to the specified CTF heights and lengths.
CTF-length: = 50 mm, CTF-HEIGHT: = 30 mm, Cross width: = 20 mm, angle: = 0.5° .
N.B.: The foundation dimensions are absolute minimum requirements!

Index	Revision	Date	Name	Configuration
D	Relocation of tower 2 foundation	07/12/2020	SHT	

Doppelmayr® Innova Patent GmbH Rieckenbachstr. 8-12 A-6960 WOLFURTWUSTRIA

G-Class: 0

Scale 1:20 Paper: A NN

	Date	Name
DRAWN	21/04/2020	SHT
approved		
SAFED		

Installation GUTHRIES DOUBLE CHAIR
Order 2020-15 Piece ____ X

TUBULAR TOWER FOUNDATION NO.: 2
Shaft length 9.32m
Gauge 4.00m

gross weight kg
Brief remark =Plotart=

Original drawing no. ID NO.

Drawing NO. 2020-15-C-006 Index B

This drawing is intellectual property of DOPPELMAYR Australia pty.ltd and must not be copied nor utilized in whole or in part without permission and is subject to return upon request.

A0

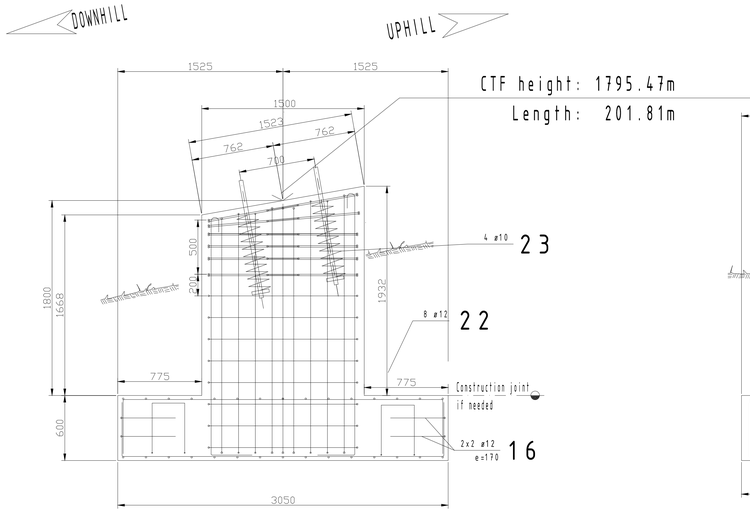

CTF height: 1795.47m

Length: 201.81m

DIRECTION OF VIEW:
DOWNHILL => UPHILL

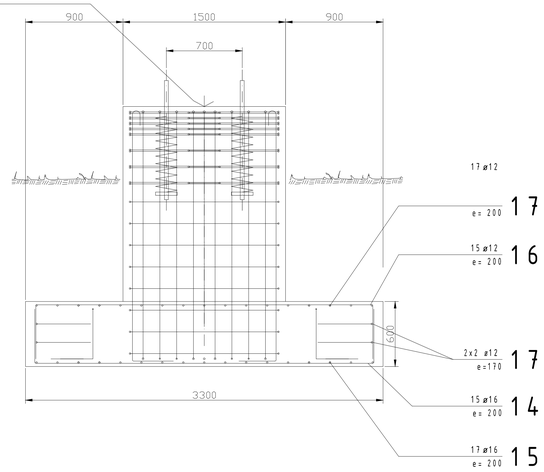

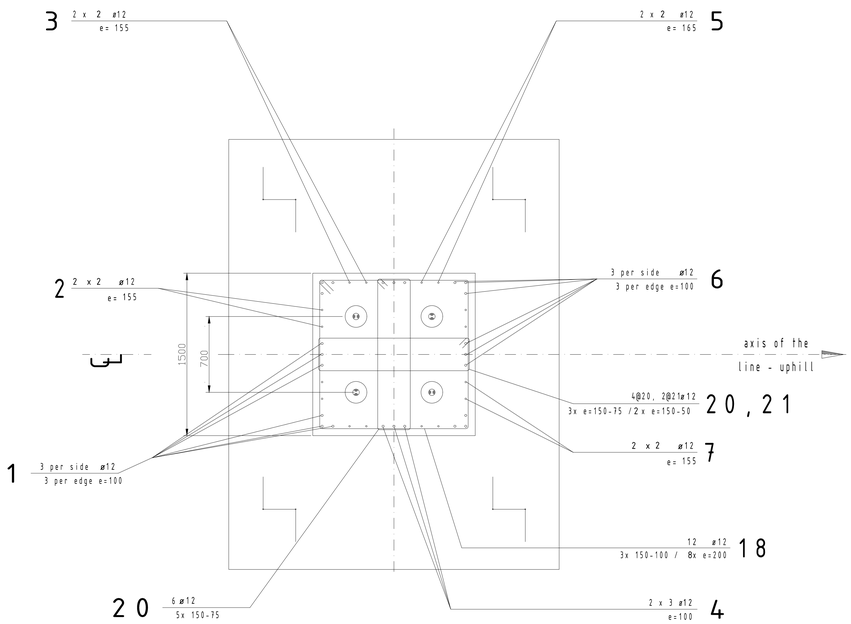

Shape	Item	Piece	ø[mm]	length	weight
200 2150 500	1	9	12	2.85 m	21 kg
200 2150 500	2	6	12	2.85 m	14 kg
200 2200 500	3	4	12	2.90 m	10 kg
200 2250 500	4	6	12	2.95 m	15 kg
200 2300 500	5	4	12	3.0 m	10 kg
200 2350 500	6	9	12	3.05 m	22 kg
200 2350 500	7	4	12	3.05 m	10 kg
500 3150 500	14	15	16	4.15 m	156 kg
500 2900 500	15	17	16	3.90 m	166 kg
500 3150 500	16	19	12	4.15 m	63 kg
500 2900 500	17	21	12	3.90 m	65 kg
1390 1390 150 1390 150 1390	18	12	12	5.86 m	56 kg
1390 1410 150 1390 150 1410	19	2	12	5.90 m	10 kg
300 1390 150 1390 150 1390	20	10	12	3.68 m	30 kg
300 1410 150 1390 150 1410	21	2	12	3.74 m	6 kg
500 250 250 500	22	8	12	1.70 m	11 kg
200 6 1100+1100	23	4	10	5.65 m	22 kg
TOTAL WEIGHT:				687 kg	

Instructions f. bending of hooks 90°:

Representation of bending form:

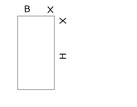

Intructions f. bending:

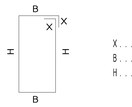

X....standard hook length
B....width of hook
H....height of hook

Design bent hooks as standard hooks

Instr. f. bending of struct. steel 550 as per ÖNORM EN1992-1-1, 8.3:

End hook: Bent hook 150°: Bent hook 90°: Loop:

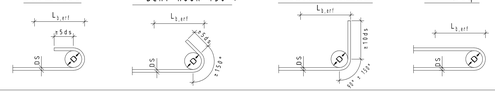

Bends, end hooks, bent hooks and loops on bars with: ds≤16mm.....D≥4ds
ds≥20mm.....D≥7ds

Bending up: Hook addition: Bending around a bar of at least the same thickness: Sling:

Bending of bars with ds</=12mm that enfold a bar of at least the same thickness.....D>/=3ds.

Australia		
Concrete grade: N32	Min. cube compressive strength 28 days: 32 N/mm²	frost-resistant, max. ag size 20mm
REINFORCEMENT: Ribbed concrete steel, yield point 500N/mm² - 500plus		

In case of transversal ground slopes, use lean concrete down to frost-proof depth.

MAXIM. EXISTING CONTACT PRESSURE: 200 kN/m²

In case of inadequate or difficult soil conditions, e.g clay or sliding ground, a specialist for soil mechanics is to be consulted. Leave construction joint surfaces and inner surfaces rough

All elevations have to be checked on site!
Minimum concrete cover 50mm base and 32mm columns
All exposed corners to have a 20mmx20mm chanfer
All dimensions in mm do not scale.

Remarks:

The company executing the works is obliged to point out any inconsistencies between this drawing, the architect"s drawings or drawings of other expert engineers resp. the local conditions on the constructions site.

ATTENTION:

A suitably experienced and qualified engineer is required to inspect the foundation material during construction and verify that an allowable bearing pressure of not less than 200kN/m² is achieved.

IMPORTANT:

The drawing is only schematic!

Only the dimensions are applicable!

Vcoolumn= 4.1 m³
Vbase= 6.1 m³
Vtotal=10.2 m³

IMPORTANT-Take into account the geotechnical engineering assessment when executing the construction works of the foundation!

ENSURE FOUNDATION HAS EARTH BONDING

The foundation must be completely back-filled in equal layers on the entire surface below the CTF height.
The backfill load was considered in the calculation. - specific weight 16 kN/m³.

DISTANCE CTF TO GROUND: 1100mm

If the weight of backfill cannot be carried out in the hereby specified size, the load must be applied in a different way (e.g. concrete load)

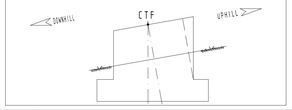

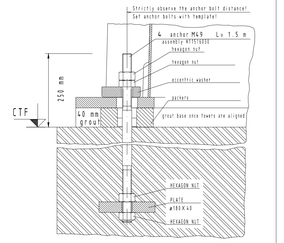

! I M P O R T A N T !
The anchors must be imbedded in concrete exactly parallel to each other and at right angle to the top foundation. Anchor bolts must NOT be welded nor tacked (risk of fracture).

After tower GROUTING, pre-tension anchor bolts hydraulically:

anchor M49 - 500 kN

4 anchor M49 delivery Doppelmayr
+ template for concrete work

Left Installation 10deg INCLINATION

The foundations must be surveyed in terrain exactly according to the specified CTF heights and lengths.
CTF-length: = 50 mm, CTF-HEIGHT: = 30 mm, Cross width: = 20 mm, angle: = 0.5°.
N.B.: The foundation dimensions are absolute minimum requirements!

Index	Revision	Date	Name	Configuration	ID NO.

Doppelmayr® Innova Patent GmbH Rieckenbachstr. 8-12 A-6960 WOLFURTWESTRIA

G-Class: 0

Scale 1/20 Sector. w EN2 | Drawn 24/09/2020 SKT | Date | Name | approved

Installation GUTHRIES DOUBLE CHAIR
Order: 2020-15 Place X

TUBULAR TOWER FOUNDATION NO.: 3
Shaft length 9.34m
Gauge 4.00m

gross weight kg
Paper size =Plotart=

Original drawing no. ID NO.

Drawing-NO. NO. 2020-15-C-007 Issue A

This drawing is intellectual property of DOPPELMAYR Australia pty. ltd and must not be copied nor utilized in whole or in part without permission and is subject to return upon request.

A0

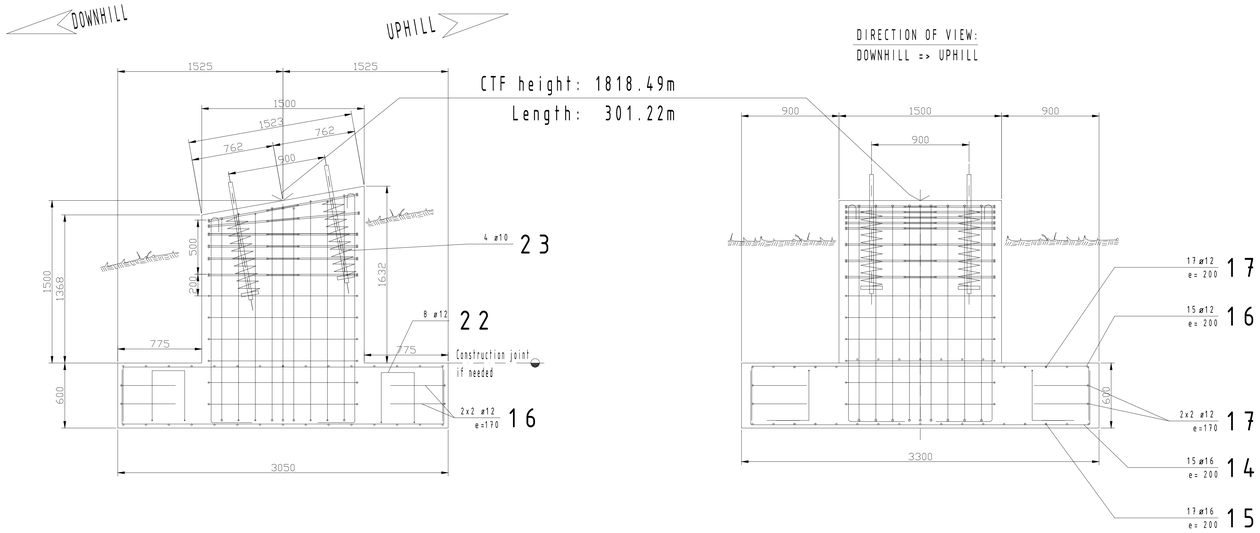

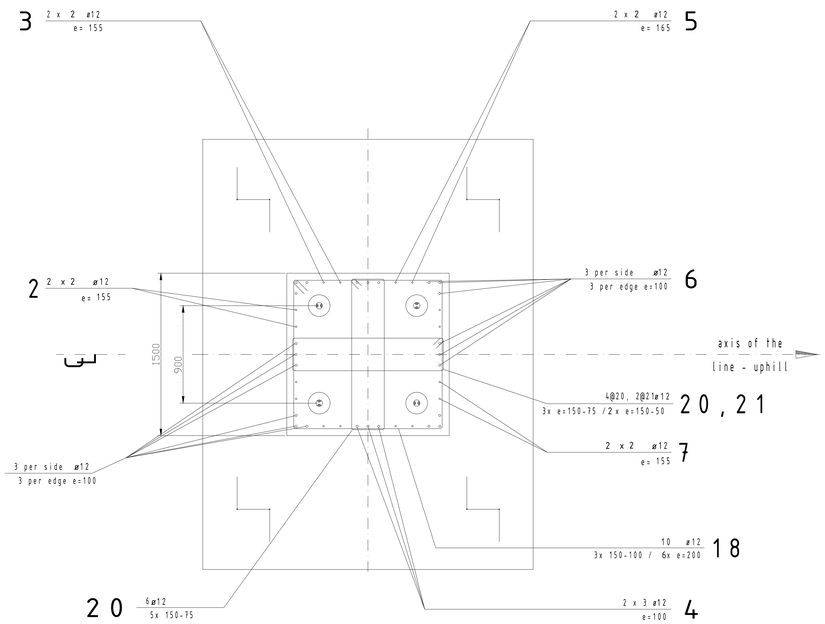

Shape	Item	Piece	ø[mm]	length	weight
200 / 500 / 1850	1	9	12	2.55 m	19 kg
200 / 500 / 1850	2	6	12	2.55 m	13 kg
200 / 500 / 1900	3	4	12	2.60m	9 kg
200 / 500 / 1950	4	6	12	2.65 m	13 kg
200 / 500 / 2000	5	4	12	2.70 m	9 kg
200 / 500 / 2050	6	9	12	2.75 m	20 kg
200 / 500 / 2050	7	4	12	2.75 m	9 kg
500 / 3150 / 500	14	15	16	4.15 m	156 kg
500 / 2900 / 500	15	17	16	3.90 m	166 kg
500 / 3150 / 500	16	19	12	4.15 m	63 kg
500 / 2900 / 500	17	21	12	3.90 m	65 kg
1390 150 / 1390 / 1390 150	18	10	12	5.86 m	47 kg
1390 150 / 1390 / 1410	19	2	12	5.90 m	10 kg
300 / 1390 150 / 1390 / 1390	20	10	12	3.68 m	30 kg
300 / 1410 150 / 1390 / 1410	21	2	12	3.74 m	6 kg
500 / 200 / 500	22	8	12	1.70 m	11 kg
200 / 6 / 100x=100	23	4	10	5.65 m	22 kg
TOTAL WEIGHT:				668 kg	

Instructions f. bending of hooks 90°:

Representation of bending form:

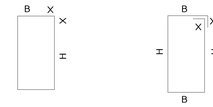

Intructions f. bending:

X...standard hook length
B...width of hook
H...height of hook

Design bent hooks as standard hooks

Instr. f. bending of struct. steel 550 as per ÖNORM EN1992-1-1, 8.3:

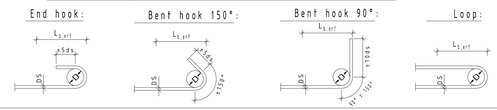

Bends, end hooks, bent hooks and loops on bars with: ds≤16mm.....D≥4ds
ds≥20mm.....D≥7ds

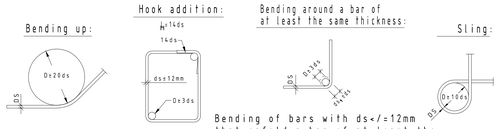

Bending of bars with ds</=12mm that enfold a bar of at least the same thickness.....D>/=3ds.

Australia

Concrete grade: N32 Min. cube compressive strength 28 days: 32 N/mm² frost-resistant, max. ag size 20mm

REINFORCEMENT: Ribbed concrete steel, yield point 500N/mm² - 500plus

In case of transversal ground slopes, use lean concrete down to frost-proof depth.

MAXIM. EXISTING CONTACT PRESSURE: 200 kN/m²

In case of inadequate or difficult soil conditions, e.g clay or sliding ground, a specialist for soil mechanics is to be consulted. Leave construction joint surfaces and inner surfaces rough

All elevations have to be checked on site!
Minimum concrete cover 50mm base and 32mm columns
All exposed corners to have a 20mmx20mm chamfer
All dimensions in mm do not scale.

Remarks:

The company executing the works is obliged to point out any inconsistencies between this drawing, the architect"s drawings or drawings of other expert engineers resp. the local conditions on the constructions site.

ATTENTION:

A suitably experienced and qualified engineer is required to inspect the foundation material during construction and verify that an allowable bearing pressure of not less than 200kN/m² is achieved.

IMPORTANT:

The drawing is only schematic!

Only the dimensions are applicable!

Vcolumn= 3.4 m³
Vbase= 6.1 m³
Vtotal=9.5 m³

IMPORTANT-Take into account the geotechnical engineering assessment when executing the construction works of the foundation!

ENSURE FOUNDATION HAS EARTH BONDING

The foundation must be completely back-filled in equal layers on the entire surface below the CTF height.
The backfill load was considered in the calculation. - specific weight 16 kN/m³.

DISTANCE CTF TO GROUND: 480 mm

If the weight of backfill cannot be carried out in the hereby specified size, the load must be applied in a different way (e.g. concrete load)

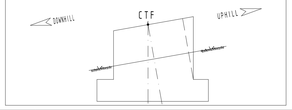

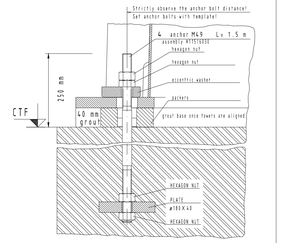

! I M P O R T A N T !
The anchors must be imbedded in concrete exactly parallel to each other and at right angle to the top foundation. Anchor bolts must NOT be welded nor tacked (risk of fracture).

After tower GROUTING, pre-tension anchor bolts hydraulically:

anchor M49 - 500 kN

4 anchor M49 delivery Doppelmayr
+ template for concrete work

Left Installation 10deg INCLINATION

The foundations must be surveyed in terrain exactly according to the specified CTF heights and lengths.
CTF-length: + 50 mm, CTF-HEIGHT: + 30 mm, Cross width: + 20 mm, angle: + 0.5°.
N.B.: The foundation dimensions are absolute minimum requirements!

Index	Revision	Date	Name	Configuration	ID NO.

Doppelmayr®
Innova Patent GmbH
Rieckenbachstr. 8-12
A-6960 WOLFURTWUSTRIA

G-Class: 0

Scale: 1/20
Sector. w EN2: SA4123

	Date	Name
Drawn	24/09/2020	SKT
approved		

Installation: GUTHRIES DOUBLE CHAIR
Order: 2020-15 Place: X

gross weight: kg
Paper size: =Plotart=

TUBULAR TOWER FOUNDATION NO.: 4
Shaft length 10.79m
Gauge 4.00m

Original drawing no. ID NO.

Drawing NO. NO.: 2020-15-C-008
Issue: A

This drawing is intellectual property of DOPPELMAYR Australia pty. ltd and must not be copied nor utilized in whole or in part without permission and is subject to return upon request.

A0

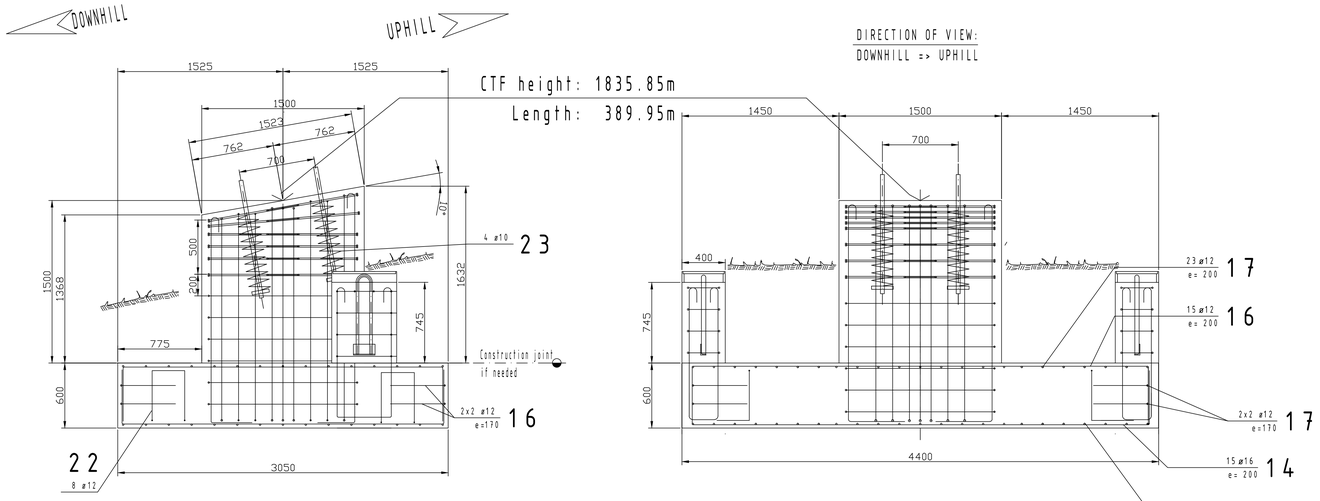

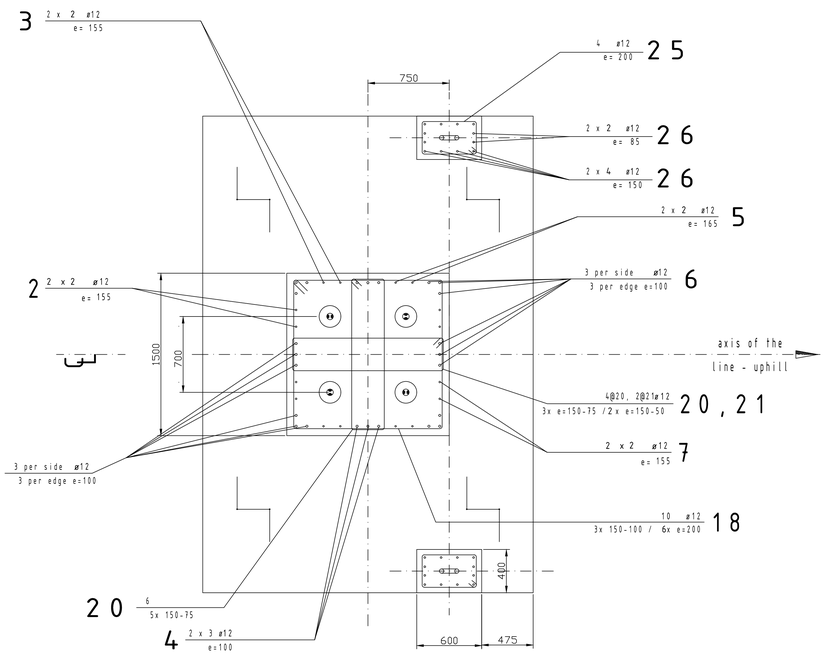

Shape	Item	Piece	ø[mm]	length	weight
200 / 500 / 1850	1	9	12	2.55 m	19 kg
200 / 500 / 1850	2	6	12	2.55 m	13 kg
200 / 500 / 1900	3	4	12	2.60 m	9 kg
200 / 500 / 1950	4	6	12	2.65 m	13 kg
200 / 500 / 2000	5	4	12	2.70 m	9 kg
200 / 500 / 2050	6	9	12	2.75 m	20 kg
200 / 500 / 2050	7	4	12	2.75 m	9 kg
500 / 4300 / 500	14	15	16	5.30m	199 kg
500 / 2900 / 500	15	17	16	3.90 m	166 kg
500 / 4300 / 500	16	19	12	5.30 m	80 kg
500 / 2900 / 500	17	27	12	3.90 m	84 kg
1390 150 / 1390 / 1390	18	10	12	5.86 m	47 kg
1390 150 / 1390 / 1410	19	2	12	5.90 m	10 kg
1390 150 / 1390 / 380	20	10	12	3.68 m	30 kg
1410 150 / 1410 / 380	21	2	12	3.74 m	6 kg
500 / 500	22	8	12	1.70 m	11 kg
6 / 200 / 1000+1000	23	4	10	5.65 m	28 kg
	24	2	35	ITEM 24 DELIVERY BY DOPPELMAYR	
15 / 30 / 50 / 15	25	8	12	1.90 m	13 kg
15 / 120 / 15	26	16	16	1.50 m	18 kg
TOTAL WEIGHT:				756 kg	

Instructions f. bending of hooks 90°:

Representation of bending form: | Infructions f. bending:

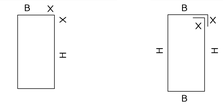

X...standard hook length
B...width of hook
H...height of hook

Design bent hooks as standard hooks

Instr. f. bending of struct. steel 550 as per ÖNORM EN1992-1-1, 8.3:

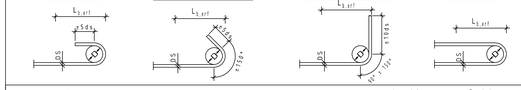

Bends, end hooks, bent hooks and loops on bars with: ds≤16mm.....D≥4ds
ds≥20mm.....D≥7ds

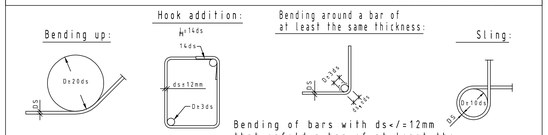

Bending of bars with ds</=12mm that enfold a bar of at least the same thickness.....D>/=3ds.

Australia

Concrete grade: N32 Min. cube compressive strength 28 days: 32 N/mm² frost-resistant, max. ag size 20mm

REINFORCEMENT: Ribbed concrete steel, yield point 500N/mm² - 500plus

In case of transversal ground slopes, use lean concrete down to frost-proof depth.

MAXIM. EXISTING CONTACT PRESSURE: 200 kN/m²

In case of inadequate or difficult soil conditions, e.g clay or sliding ground, a specialist for soil mechanics is to be consulted. Leave construction joint surfaces and inner surfaces rough

All elevations have to be checked on site!
Minimum concrete cover 50mm base and 32mm columns
All exposed corners to have a 20mmx20mm chamfer
All dimensions in mm do not scale.

Remarks:

The company executing the works is obliged to point out any inconsistencies between this drawing, the architect's drawings or drawings of other expert engineers resp. the local conditions on the constructions site.

IMPORTANT:

The drawing is only schematic!
Only the dimensions are applicable!

Vcolumn= 3.4 m³
Vbase= 8.1 m³
Vhold=0.4 m³
Vtotal=11.9 m

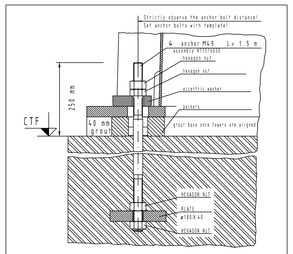

IMPORTANT
The anchors must be imbedded in concrete exactly parallel to each other and at right angle to the top foundation. Anchor bolts must NOT be welded nor tacked (risk of fracture).

After tower GROUTING, pre-tension anchor bolts hydraulically:

anchor M49 - 500 kN

IMPORTANT:Take into account the geotechnical engineering assessment when executing the construction works of the foundation!

ENSURE FOUNDATION HAS EARTH BONDING

4 anchor M49 delivery Doppelmayr
+ template for concrete work

The foundation must be completely back-filled in equal layers on the entire surface below the CTF height.
The backfill load was considered in the calculation. - specific weight 16 kN/m³

DISTANCE CTF TO GROUND: 940 mm

If the weight of backfill cannot be carried out in the hereby specified size, the load must be applied in a different way (e.g. concrete load)

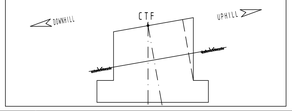

Left Installation 10deg INCLINATION

ATTENTION:

A suitably experienced and qualified engineer is required to inspect the foundation material during construction and verify that an allowable bearing pressure of not less than 200kN/m² is achieved.

The foundations must be surveyed in terrain exactly according to the specified CTF heights and lengths.
CTF length: ± 50 mm, CTF HEIGHT: ± 30 mm, Cross width: ± 20 mm, angle: ± 0.5°.
N.B.: The foundation dimensions are absolute minimum requirements!

Index	Revision	Date	Name	Configuration	TD NO.

Doppelmayr®
Innova Patent GmbH
Rieshaupterstr. 8-10
A-6850 WOLFURTWESTRIA

G-Class: 0

Scale 1:20
Author: W.KNZ

	Date	Name
Drawn	24/04/2020	SAT
Approved		
Saved		

Installation GUTHRIES DOUBLE CHAIR
Order 2020-15 Piece X

TUBULAR TOWER FOUNDATION NO.: 5
Shaft length 7.45m
Gauge 4.00m

gross weight kg
First usage =Plotart=

Orig.no. drawing to TD NO.

Stage NO. KS 2020-15-C-009
Issue A

This drawing is intellectual property of DOPPELMAYR Australia pty.ltd and must not be copied nor utilised in whole or in part without permission and is subject to return upon request.

A0

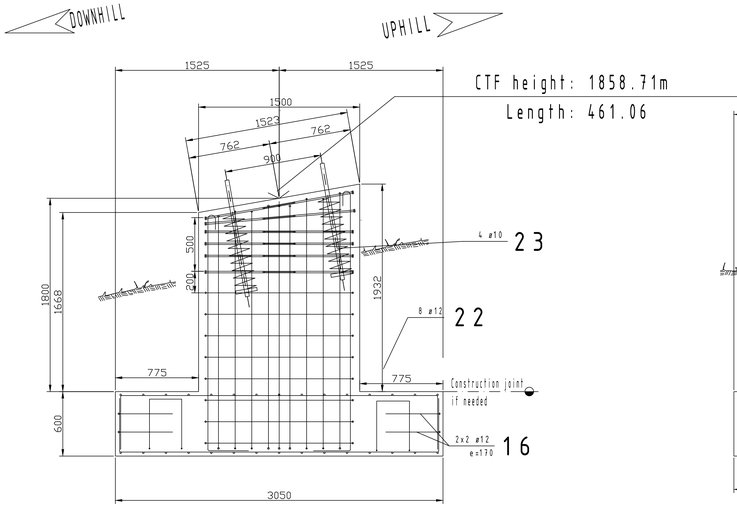

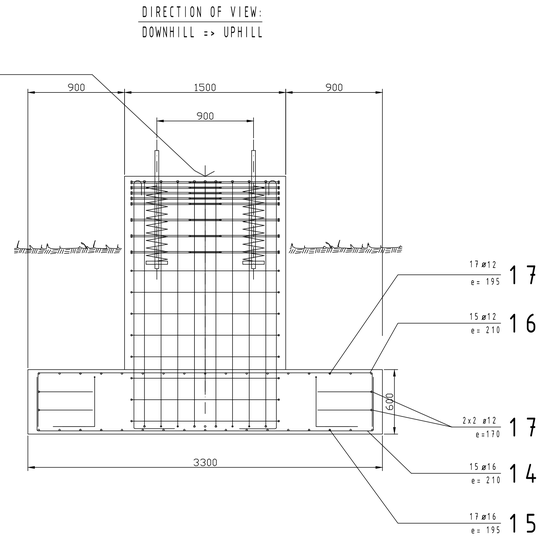

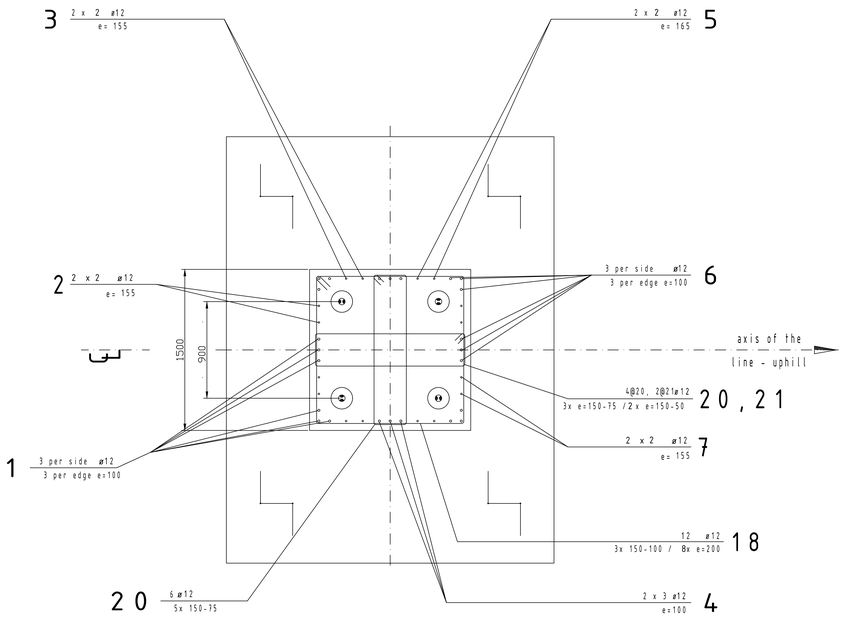

Shape	Item	Piece	ø[mm]	length	weight
200 / 2150 / 505	1	9	12	2.85 m	21 kg
200 / 2150 / 505	2	6	12	2.85 m	14 kg
200 / 2200 / 505	3	4	12	2.90 m	10 kg
200 / 2250 / 505	4	6	12	2.95 m	15 kg
200 / 2300 / 505	5	4	12	3.0 m	10 kg
200 / 2350 / 505	6	9	12	3.05 m	22 kg
200 / 2350 / 505	7	4	12	3.05 m	10 kg
580 / 3150 / 505	14	15	16	4.15 m	156 kg
580 / 2900 / 505	15	17	16	3.90 m	166 kg
580 / 3150 / 505	16	19	12	4.15 m	63 kg
580 / 2900 / 505	17	21	12	3.90 m	65 kg
1390 / 1390 / 1390 / 1390 / 150 / 505	18	12	12	5.86 m	56 kg
1390 / 1410 / 1410 / 1390 / 150 / 505	19	2	12	5.90 m	10 kg
380 / 1390 / 1390 / 150 / 505	20	10	12	3.68 m	30 kg
380 / 1410 / 1410 / 150 / 505	21	2	12	3.34 m	6 kg
580 / 505 / 505 / 580	22	8	12	1.70 m	11 kg
200 / 6 / 1111111 / 1111111	23	4	10	5.65 m	22 kg
TOTAL WEIGHT:				687 kg	

Instructions f. bending of hooks 90°:

Representation of bending form: Intructions f. bending:

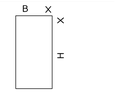

X...standard hook length
B...width of hook
H...height of hook

Design bent hooks as standard hooks

Instr. f. bending of struct. steel 550 as per ONORM EN1992-1-1, 8.3:

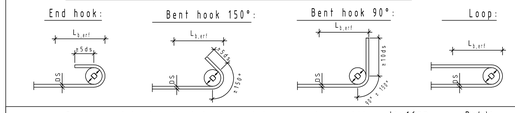

Bends, end hooks, bent hooks and loops on bars with: ds≤16mm.....D≥4ds
ds≥20mm.....D≥7ds

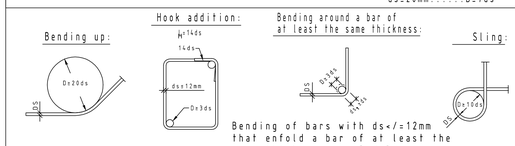

Bending of bars with ds</=12mm that enfold a bar of at least the same thickness.....D>/=3ds.

Australia		
	Concrete grade: N32 Min. cube compressive strength 28 days: 32 N/mm²	frost-resistant, max. ag size 20mm
	REINFORCEMENT: Ribbed concrete steel, yield point 500N/mm² - 500plus	

In case of transversal ground slopes, use lean concrete down to frost-proof depth.

MAXIM. EXISTING CONTACT PRESSURE: 200 kN/m²

In case of inadequate or difficult soil conditions, e.g clay or sliding ground, a specialist for soil mechanics is to be consulted. Leave construction joint surfaces and inner surfaces rough

All elevations have to be checked on site!
Minimum concrete cover 50mm base and 32mm columns
All exposed corners to have a 20mmx20mm chamfer
All dimensions in mm do not scale.

Remarks:

The company executing the works is obliged to point out any inconsistencies between this drawing, the architect's drawings or drawings of other expert engineers resp. the local conditions on the constructions site.

IMPORTANT:

The drawing is only schematic!
Only the dimensions are applicable!

Vcolumn= 4.1 m³
Vbase= 6.1 m³
Vtotal=10.2 m³

IMPORTANT:Take into account the geotechnical engineering assessment when executing the construction works of the foundation!

ENSURE FOUNDATION HAS EARTH BONDING

The foundation must be completely back-filled in equal layers on the entire surface below the CTF height.
The backfill load was considered in the calculation. - specific weight 16 kN/m³

DISTANCE CTF TO GROUND: 980 mm

If the weight of backfill cannot be carried out in the hereby specified size, the load must be applied in a different way (e.g. concrete load)

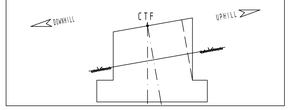

Strictly observe the anchor bolt distance!
Set anchor bolts with template!

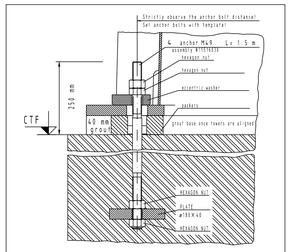

IMPORTANT:
The anchors must be imbedded in concrete exactly parallel to each other and at right angle to the tog foundation. Anchor bolts must NOT be welded nor tacked (risk of fracture).

After tower GROUTING, pre-tension anchor bolts hydraulically:

anchor M49 - 500 kN

4 anchor M49 delivery
+ template for concrete work Doppelmayr

Left Installation 10deg INCLINATION

ATTENTION:

A suitably experienced and qualified engineer is required to inspect the foundation material during construction and verify that an allowable bearing pressure of not less than 200kN/m² is achieved.

The foundations must be surveyed in terrain exactly according to the specified CTF heights and lengths.
CTF length: ± 50 mm, CTF HEIGHT: ± 30 mm , Cross width: ± 20 mm , angle: ± 0.5° ;
N.B.: The foundation dimensions are absolute minimum requirements!

Index	Revision	Date	Name	Configuration
B	CTF CHANGED DUE TO SKIMM	15/03/2020	Name	
			D-Cfeg: 0	

Doppelmayr® Innova Patent GmbH, Rickenbachstrasse 8-10, A-6960 WOLFURT/AUSTRIA

Scale 1:20 (Size: A 0) | Drawn 2LIEPE2020 | Date 2LIEPE2020 | Name SAT | Checked | Approved | SAVED

Installation GUTHRIES DOUBLE CHAR
Order 2020-15 Price X
gross weight kg
First match =Plotart=

TUBULAR TOWER FOUNDATION NO.: 6
Shaft length 10.62m
Gauge 4.00m

Original drawing no. ID NO.
DRAWING NO. 2020-15-C-010 Index B

This drawing is intellectual property of DOPPELMAYR Australia pty ltd and must not be copied nor utilized in whole or in part without permission and is subject to return upon request.

A0

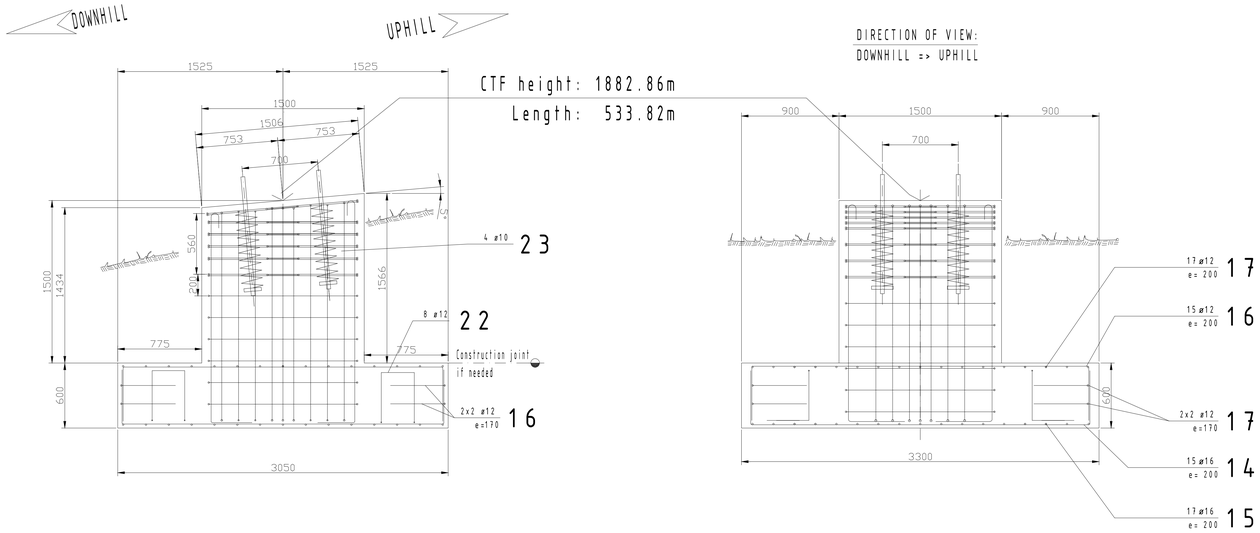

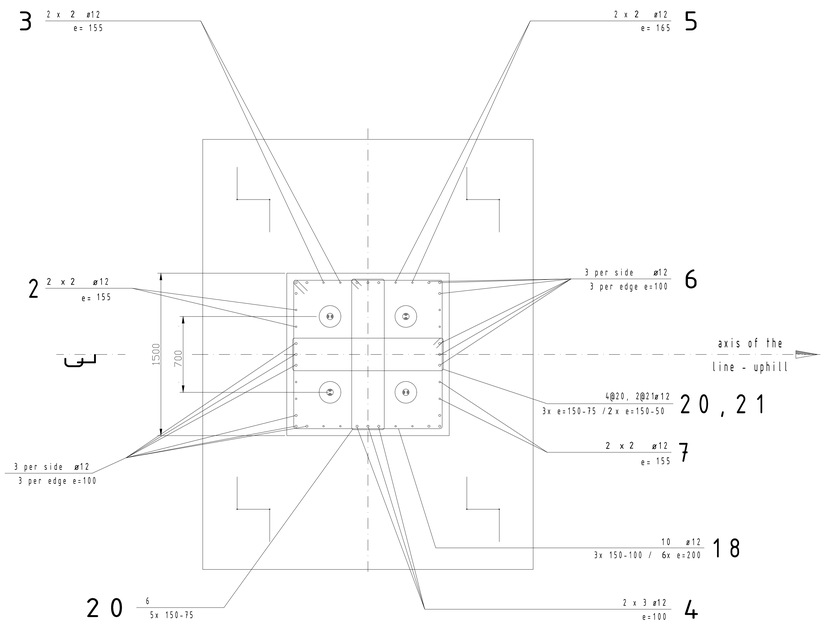

Shape	Item	Piece	ø[mm]	length	weight
200 500 1900	1	9	12	2.60 m	19 kg
200 500 1900	2	6	12	2.60 m	13 kg
200 500 1920	3	4	12	2.62 m	9 kg
200 500 1950	4	6	12	2.65 m	13 kg
200 500 1970	5	4	12	2.67 m	9 kg
200 500 2000	6	9	12	2.70 m	20 kg
200 500 2000	7	4	12	2.70 m	9 kg
500 3150 500	14	15	16	4.15 m	156 kg
500 2900 500	15	17	16	3.90 m	166 kg
500 3150 500	16	19	12	4.15 m	63 kg
500 2900 500	17	21	12	3.90 m	65 kg
1390 150 1390 150 1390 1390	18	11	12	5.86 m	52 kg
1390 150 1390 150 1390 1410	19	1	12	5.90 m	5 kg
300 1390 150 1390 150 1390	20	11	12	3.68 m	33 kg
300 1410 150 1390 150 1410	21	1	12	3.74 m	3 kg
500 200 500	22	8	12	1.70 m	11 kg
6 200 165x165	23	4	10	5.65 m	28 kg
TOTAL WEIGHT:				668 kg	

Instructions f. bending of hooks 90°:

Representation of bending form: | Intructions f. bending:

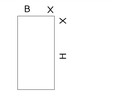

X...standard hook length
B...width of hook
H...height of hook

Design bent hooks as standard hooks

Instr. f. bending of struct. steel 550 as per ÖNORM EN1992-1-1, 8.3:

End hook: | Bent hook 150°: | Bent hook 90°: | Loop:

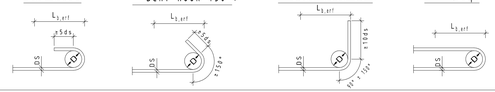

Bends, end hooks, bent hooks and loops on bars with: ds≤16mm.....D≥4ds
ds≥20mm.....D≥7ds

Bending up: | Hook addition: | Bending around a bar of at least the same thickness: | Sling:

Bending of bars with ds</=12mm that enfold a bar of at least the same thickness.....D>/=3ds.

Australia

Concrete grade: N32 Min. cube compressive strength 28 days: 32 N/mm² frost-resistant, max. ag size 20mm

REINFORCEMENT: Ribbed concrete steel, yield point 500N/mm² - 500plus

In case of transversal ground slopes, use lean concrete down to frost-proof depth.

MAXIM. EXISTING CONTACT PRESSURE: 200 kN/m²

In case of inadequate or difficult soil conditions, e.g clay or sliding ground, a specialist for soil mechanics is to be consulted. Leave construction joint surfaces and inner surfaces rough

All elevations have to be checked on site!
Minimum concrete cover 50mm base and 32mm columns
All exposed corners to have a 20mmx20mm chamfer
All dimensions in mm do not scale.

Remarks:

The company executing the works is obliged to point out any inconsistencies between this drawing, the architect"s drawings or drawings of other expert engineers resp. the local conditions on the constructions site.

ATTENTION:

A suitably experienced and qualified engineer is required to inspect the foundation material during construction and verify that an allowable bearing pressure of not less than 200kN/m² is achieved.

IMPORTANT:

The drawing is only schematic!

Only the dimensions are applicable!

Vcoolumn= 3.4 m³
Vbase= 6.1 m³
Vtotal=9.5 m³

IMPORTANT-Take into account the geotechnical engineering assessment when executing the construction works of the foundation!

ENSURE FOUNDATION HAS EARTH BONDING

The foundation must be completely back-filled in equal layers on the entire surface below the CTF height.
The backfill load was considered in the calculation. - specific weight 16 kN/m³.

DISTANCE CTF TO GROUND: 470 mm

If the weight of backfill cannot be carried out in the hereby specified size, the load must be applied in a different way (e.g. concrete load)

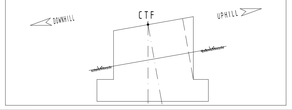

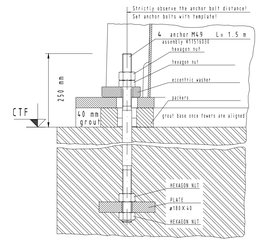

! I M P O R T A N T !
The anchors must be imbedded in concrete exactly parallel to each other and at right angle to the top foundation. Anchor bolts must NOT be welded nor tacked (risk of fracture).

After tower GROUTING, pre-tension anchor bolts hydraulically:

anchor M49 - 500 kN

4 anchor M49 delivery Doppelmayr
+ template for concrete work

Left Installation 5deg INCLINATION

The foundations must be surveyed in terrain exactly according to the specified CTF heights and lengths.
CTF-length: ± 50 mm, CTF-HEIGHT: ± 30 mm, Cross width: ± 20 mm, angle: ± 0.5°.
N.B.: The foundation dimensions are absolute minimum requirements!

Index	Revision	Date	Name	Configuration	ID NO.

Doppelmayr® Innova Patent GmbH Rieckenbachstr. 8-10 A-6960 WOLFURTWESTRIA

G-Class: 0

Scale 1/20 Sector. w EN2

	Date	Name
Drawn	24/09/2020	SKT
approved		
SAP02		

Installation GUTHRIES DOUBLE CHAIR
Order 2020-15 Place X
gross weight kg
Plot date =Plotart=

TUBULAR TOWER FOUNDATION NO.: 7
Shaft length 8.44m
Gauge 3.17m

Original drawing no. ID NO.

Drawing NO. NO. 2020-15-C-011 Issue A

This drawing is intellectual property of DOPPELMAYR Australia pty. ltd and must not be copied nor utilised in whole or in part without permission and is subject to return upon request.

A0

VIEW A
M 1:25

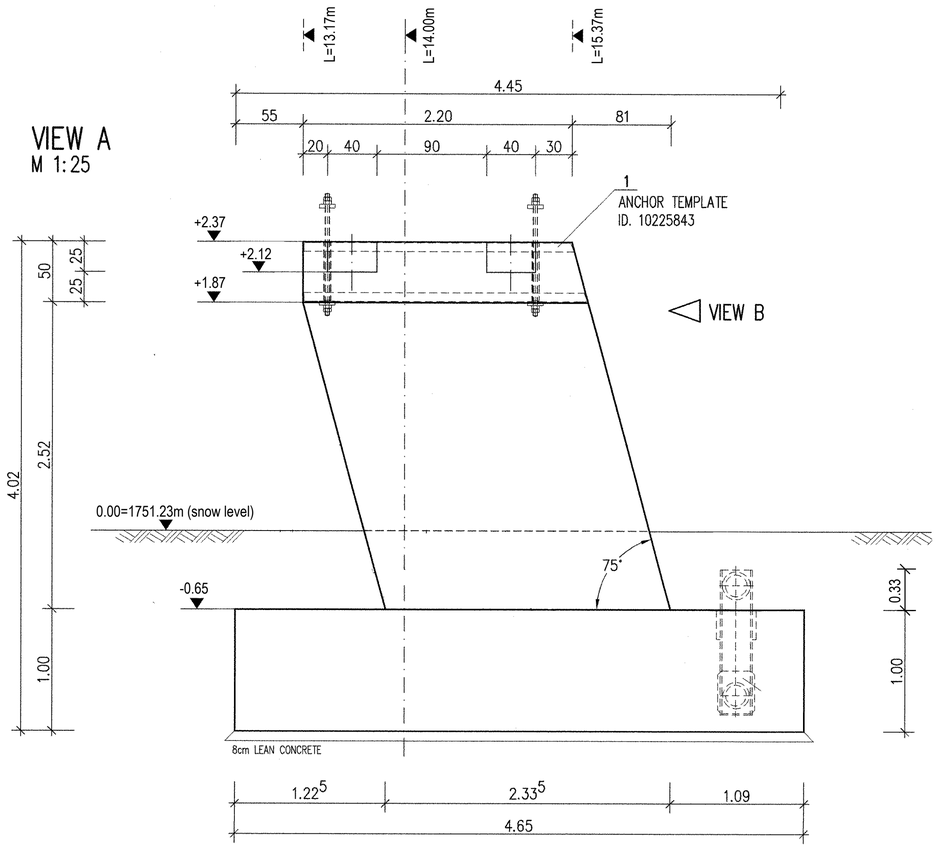

VIEW B
M 1:25

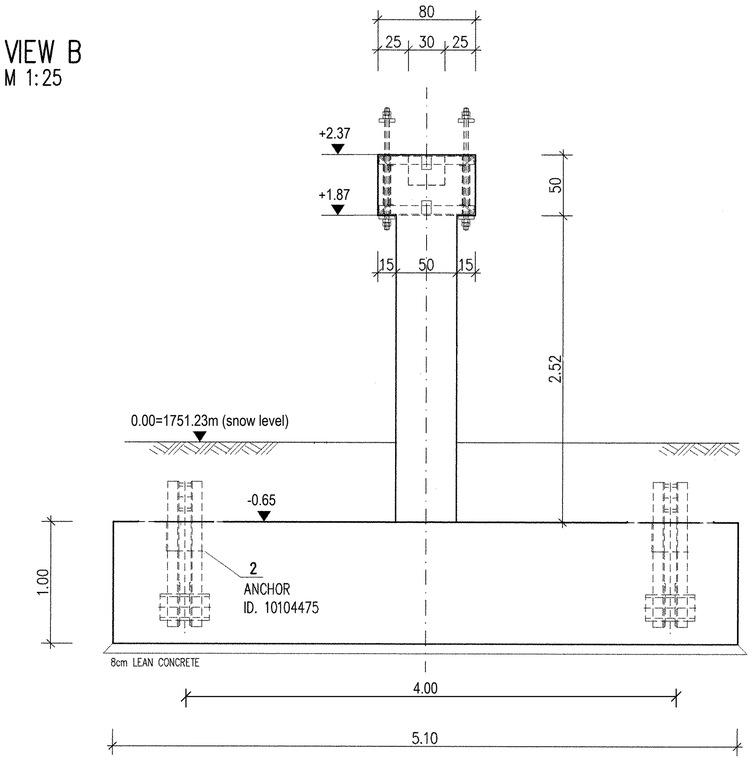

PLAN VIEW
M 1:25

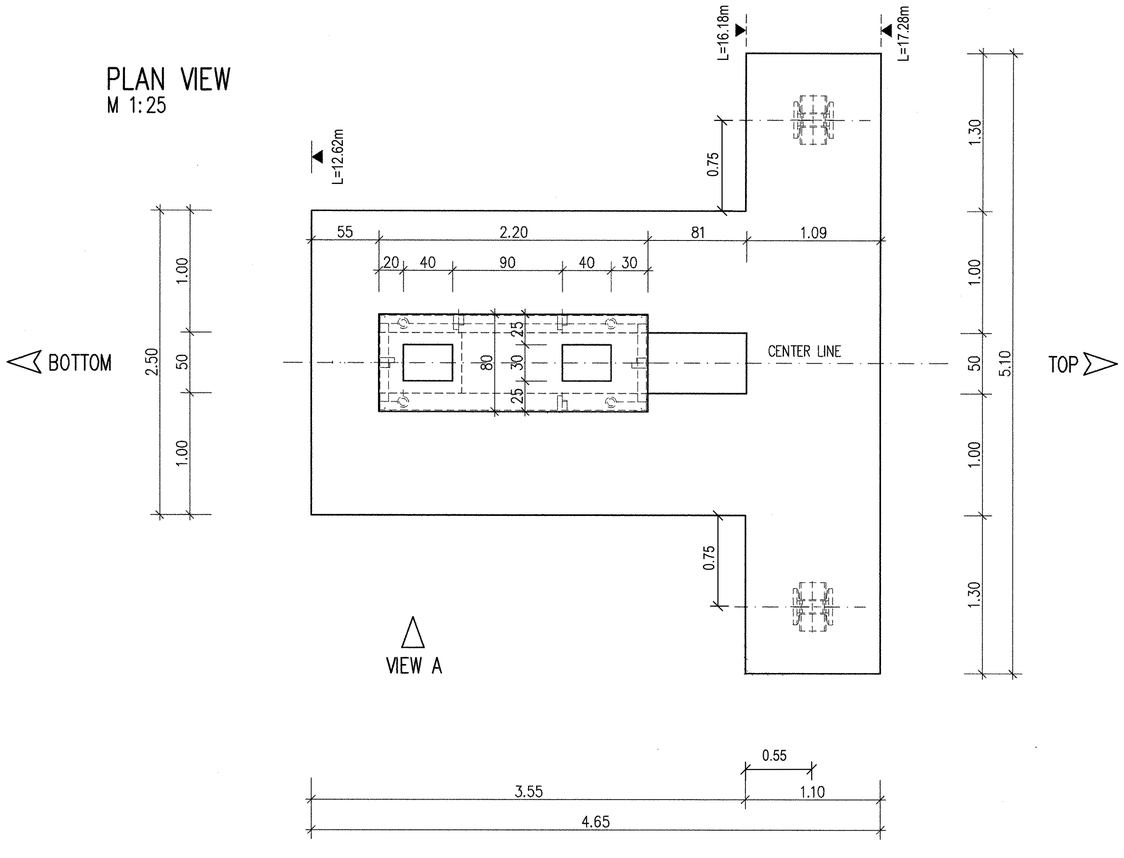

CONCRETE VOLUME:

FOUNDATION	15.50 m3
SHAFT	3.80 m3
TOTAL	**19.30 m3**

DIMENSIONS IN [cm, m]

REVISION:	DESCRIPTION:	DRAWN:	DATE:

Doppelmayr Australia Pty Ltd. 57 Lee Avenue Jindabyne NSW 2627
Ph. (02) 6456 2385, email: info@doppelmayr.com.au

This drawing is intellectual property of Doppelmayr.

PROJECT: GUTHRIES

PARTS: BOTTOM FOUNDATION LAYOUT

TYPE: FORMWORK DRAWING

DRAWN: ST

CHECKED:

RELEASED:

SCALE: 1:25

PLAN-NR.: 2020-15-C-001

SIZE: A2

FILE:

DATE: 23/09/20

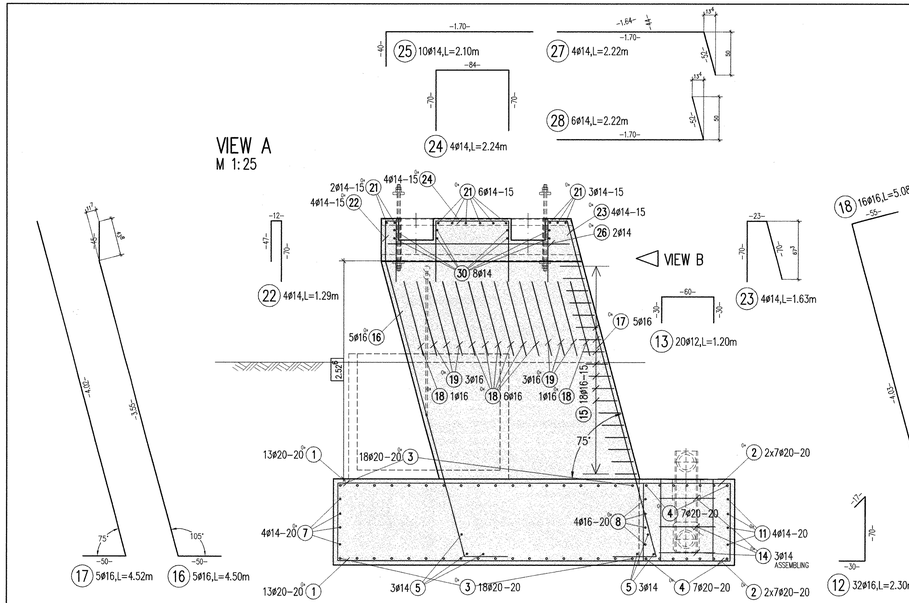

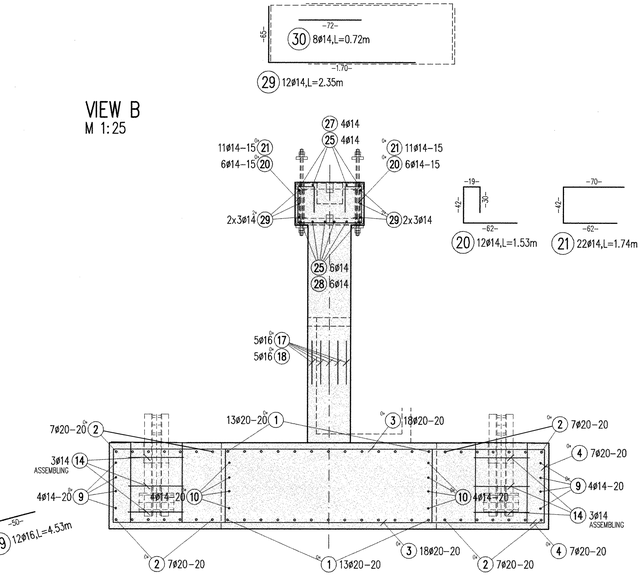

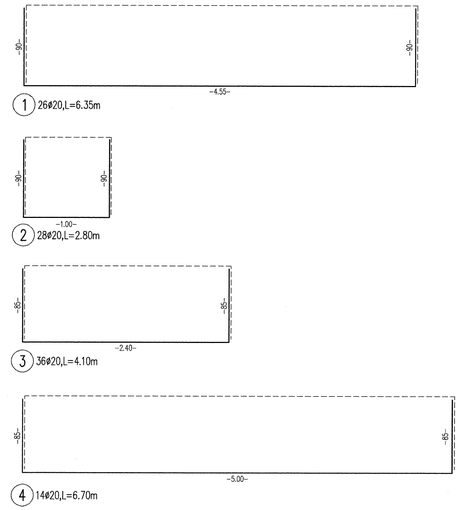

BENDING LIST				Reinforcing steel : TEMPCORE 500 PLUS			
Pos.	Num.	d	Length	Ø12	Ø14	Ø16	Ø20
1	26	20	6.35				165.10
2	28	20	2.80				78.40
3	36	20	4.10				147.60
4	14	20	6.70				93.80
5	6	14	2.35		14.10		
6	19	16	2.48			47.12	
7	4	14	3.15		12.60		
8	8	16	2.70			21.60	
9	8	14	1.75		14.00		
10	8	14	4.83		38.64		
11	4	14	5.75		23.00		
12	32	16	1.20			73.60	
13	20	12	1.20	24.00			
14	20	14	2.94		58.80		
15	18	16	5.86			105.48	
16	5	16	4.50			22.50	
17	5	16	4.52			22.60	
18	16	16	5.08			81.28	
19	12	16	4.53			54.36	
20	12	14	1.53		18.36		
21	22	14	1.74		38.28		
22	4	14	1.29		5.16		
23	4	14	1.63		6.52		
24	4	14	2.24		8.96		
25	10	14	2.10		21.00		
26	2	14	4.40		8.80		
27	4	14	2.22		8.88		
28	6	14	2.22		13.32		
29	12	14	2.35		28.20		
30	8	14	0.72		5.76		
Total length				24.00	324.38	428.54	484.90
kg / m				Ø12 0.888	Ø14 1.210	Ø16 1.580	Ø20 2.470
kg / d				21.312	392.500	677.093	1197.703
Total weight				2288.608 kg			

CONNECTION BARS Ø8/15 FOR CABLE DRAW PIT HAVE TO BE CONSIDERED

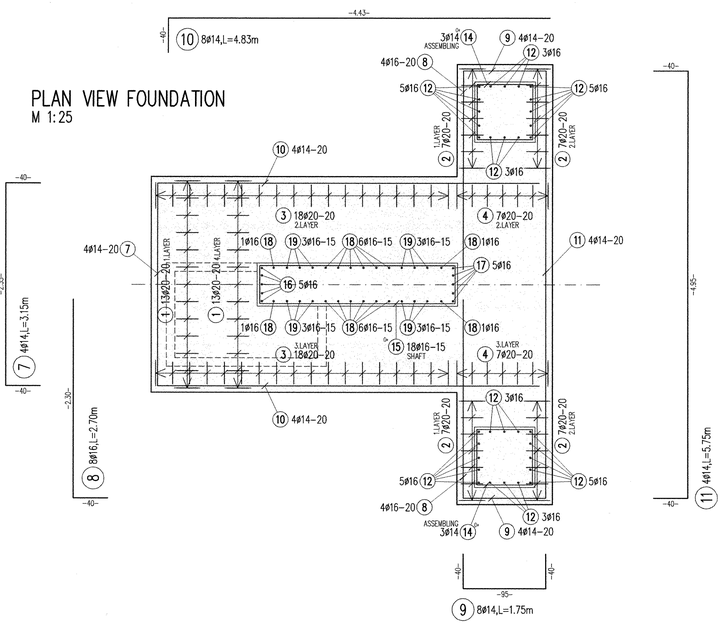

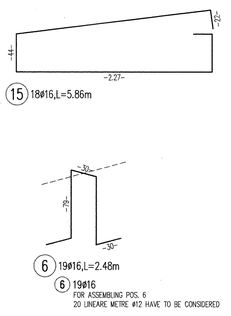

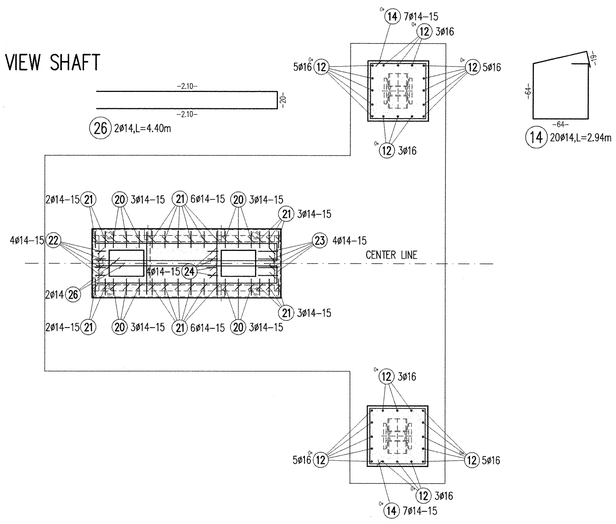

- THIS DRAWING TO BE READ IN CONNECTION WITH LAYOUT 2020-12-C-02
- MAXIMUM DESIGN BEARING PRESSURE =200 KPA
- ENSURE GEOTECHNICAL REPORT IS FOLLOWED
- USE CHAMFERS FOR ALL CONCRETE EDGES ABOVE GROUND

CONCRETE

- MIN. CONCRETE STRENGTH 32 MPA
- MAXIMUM AGGREGATE SIZE 32MM

STEEL TEMPCORE 500 PLUS

– RIBBED BARS, YIELD STRENGTH: 500 N/mm2

– CONCRETE COVER TO RE-BARS: FOUNDATION 5.0cm, SHAFT 3.0cm

TOLERANCES

– HORIZ. LENGTH: ± 2.0 cm
– FOUNDATION LEVELS: ± 1.0 cm
– SURVEYED AXIS: ± 1.0 cm

REVISION:	DESCRIPTION:	DRAWN:	DATE:

Doppelmayr Australia Pty Ltd. 57 Lee Avenue Jindabyne NSW 2627
Ph. (02) 6456 2385, email: info@doppelmayr.com.au

This drawing is intellectual property of Doppelmayr.

PROJECT: GUTHRIES

PARTS: BOTTOM FOUNDATION LAYOUT

TYPE: REINFORCEMENT DRAWING

DRAWN: ST
CHECKED:
RELEASED:
SCALE: 1:25
PLAN-NR.: 2020-15-C-002
SIZE: A2
FILE:
DATE: 23/09/20

VIEW B
M 1:25

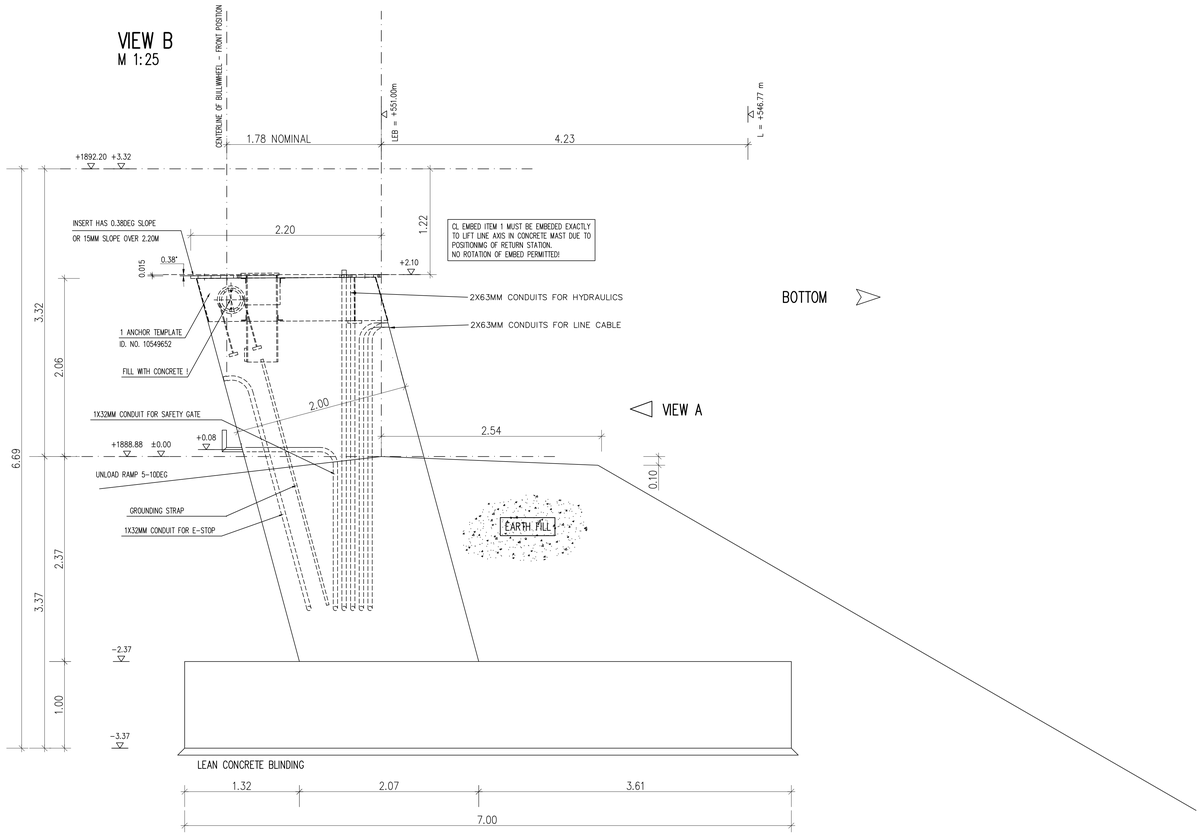

BOTTOM

VIEW A

VIEW A
M 1:25

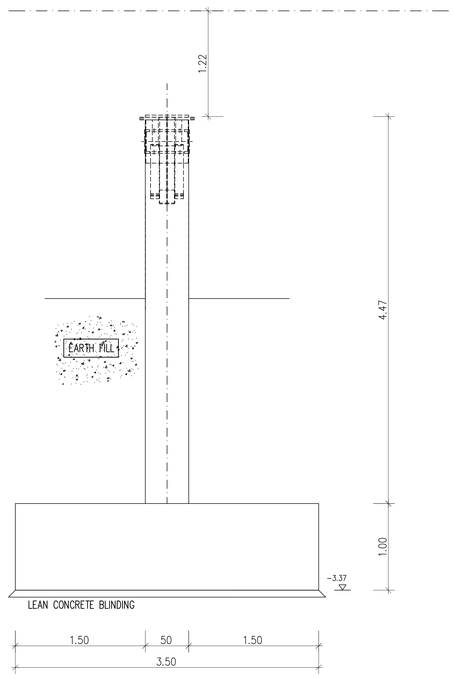

THE GEOTECHNICAL REPORT IS TO BE NOTED!
AFTER EXCAVATION THE EXISTING SOIL CONDITIONS HAVE TO BE CHECKED BY AN ENGINEER!

PLAN VIEW
M 1:25

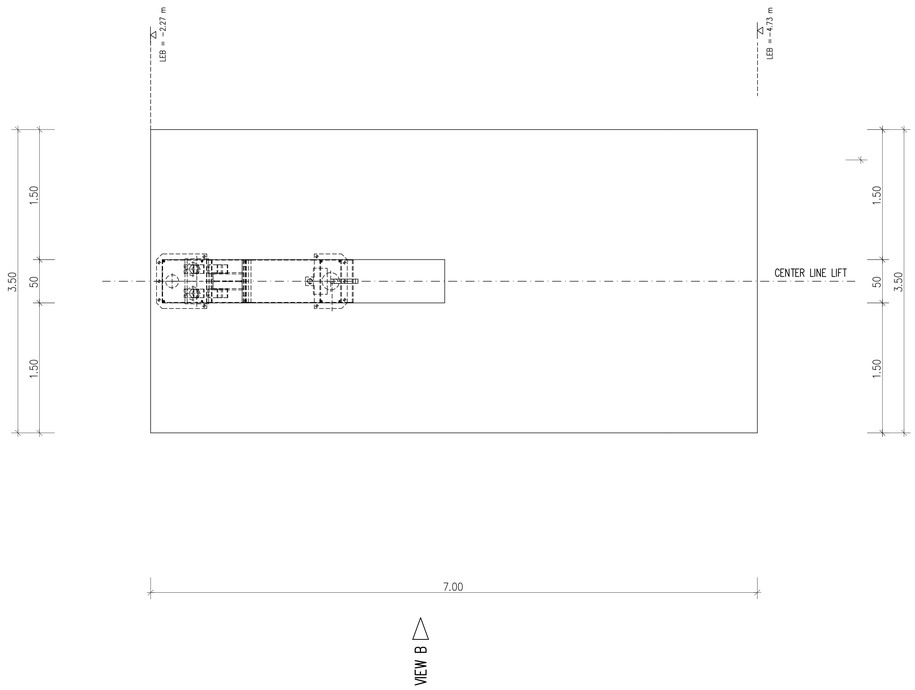

CONCRETE VOLUME:

FOUNDATION	24.5 m3
SHAFT	4.0 m3
TOTAL	28.5 m3

DIMENSIONS IN [cm, m]

±0.00 = 1888.88m (LEVEL OF UNLOADING)

- THIS DRAWING IS ONLY VALID IN CONNECTION WITH LAYOUT DRAWING NO.: DRAW–NO
- MAX. OCCURRING SOIL PRESSURE: 200KN/M2
- SOIL CONDITIONS TO BE INSPECTED BY AN ENGINEER
- DIMENSIONS TO BE CHECKED
- USE CHAMFERS FOR ALL CONCRETE EDGES ABOVE GROUND

CONCRETE
- MINIMUM COMPRESSIVE STRENGTH 32MPA
- FROST RESISTENT, MAX. PELLET SIZE: 25mm (SHAFT: 14mm)

STEEL
- RIBBED BARS, YIELD STRENGTH: 500PLUS

- CONCRETE COVER TO RE–BARS: COVER

TOLERANCES
- HORIZ. LENGTH: ± 20mm
- FOUNDATION LEVELS: ± 10mm
- SURVEYED AXIS: ± 10mm

REVISION:	DESCRIPTION:	DRAWN:	DATE:
	AENDBEZ	AENDERST	AENDDAT

DOPPELMAYR AUSTRALIA PTY LTD. 57 LEE AVENUE JINDABYNE NSW 2627
PH. 02 6456 2385, Email: info@doppelmayr.com.au

THIS DRAWING IS INTELLECTUAL PROPERTY OF DOPPELMAYR

PROJECT: GUTHRIES

PARTS: 2020–15 TOP STATION FOUNDATION FORMWORK GUTHRIES

TYPE: FORMWORK

SIZE:

FILE:

DRAWN: SHT

CHECKED:

RELEASED:

SCALE: NTS

PLAN–NR.: 2020–15–C–003

DATE: 30/09/2020

VIEW B
M 1:25

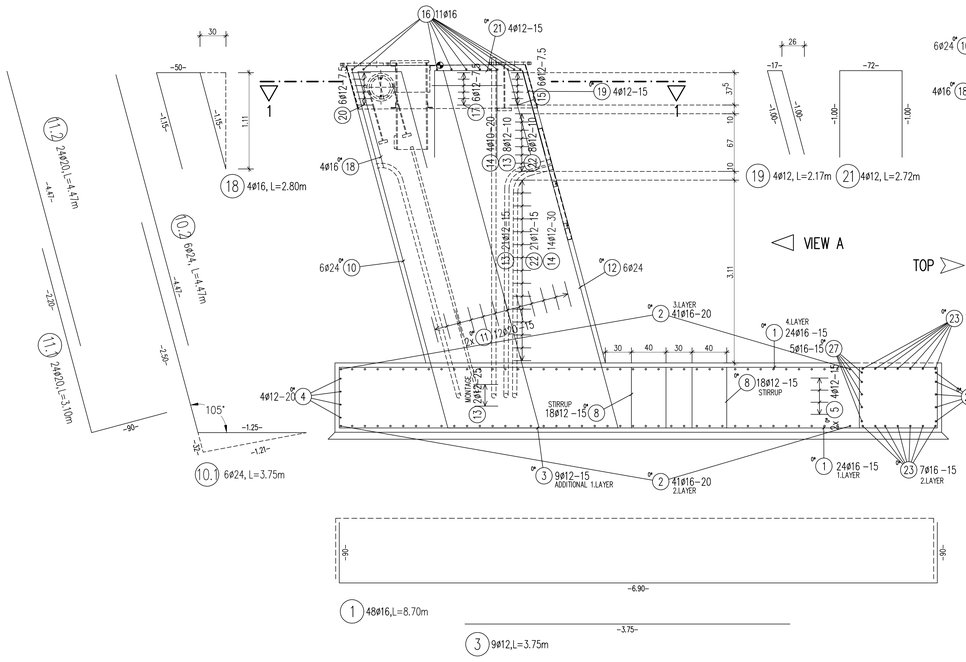

SECTION 1-1
M 1:25

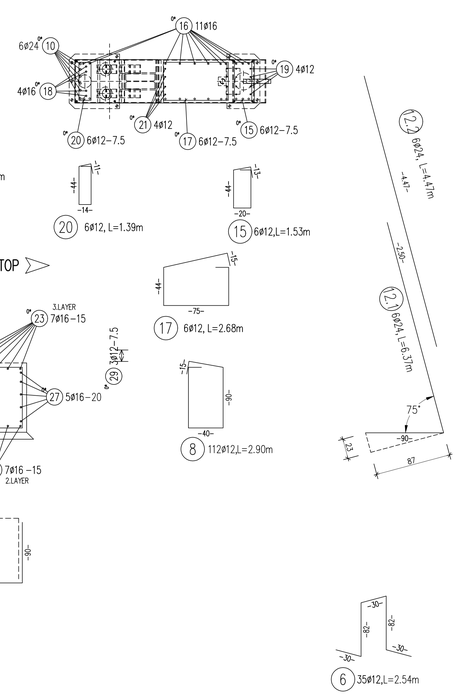

VIEW A
M 1:25

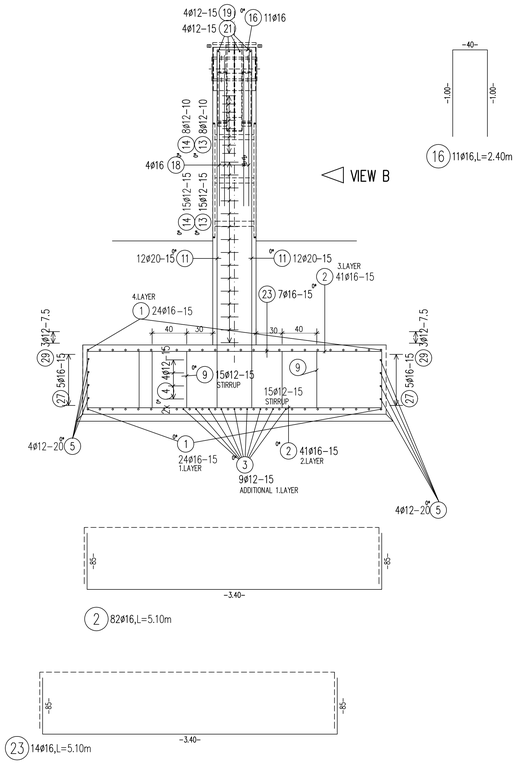

B A R S C H E D U L E Steelgrade: BST 500

Pos.	No.	ø	Length	D10	D12	D16	D20	D24
1	48	16	8.70			652		
2	82	16	4.70			676		
3	9	12	3.75		33			
4	4	12	4.15		16			
5	8	12	7.65		56			
6	35	12	2.54		80			
8	72	12	2.90		190			
9	30	12	2.80		77			
10	6	24	8.22					179
11	24	20	7.57				459	
12	6	24	7.84					171
13	31	12	5.20		146			
14	18	12	2.44		40			
15	6	12	1.54		9			
16	11	16	2.40			43		
17	6	12	2.68		15			
18	4	16	2.80			18		
19	4	12	2.17		8			
20	6	12	1.38		8			
21	4	12	2.72		10			
22	31	12	4.62		130			
23	14	16	5.10			115		
27	10	16	4.55			74		
29	6	12	1.95		11			
Total weight (kg)			3226					

PLAN VIEW FOUNDATION
M 1:25

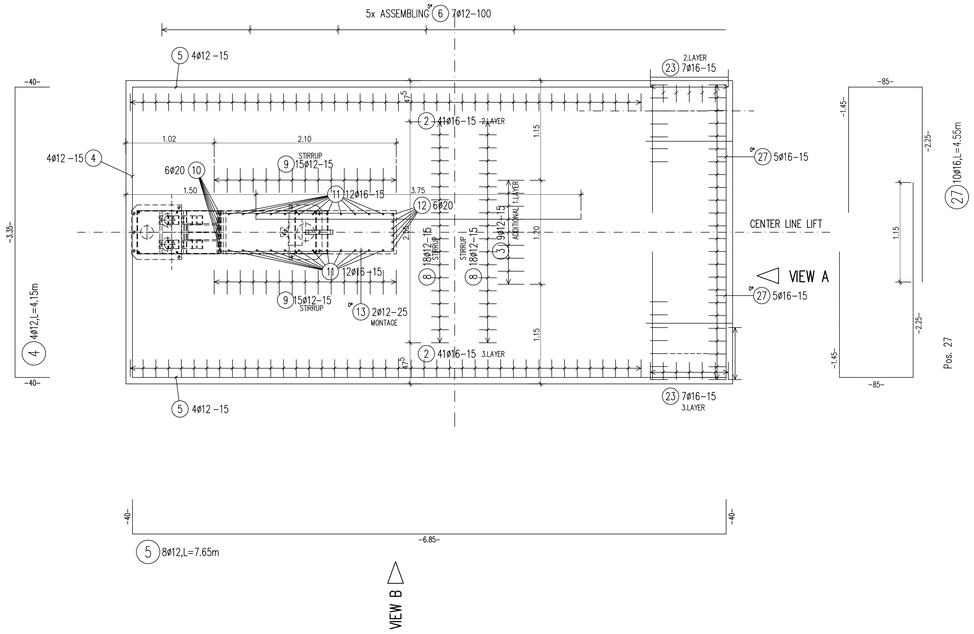

PLAN VIEW SHAFT
M 1:25

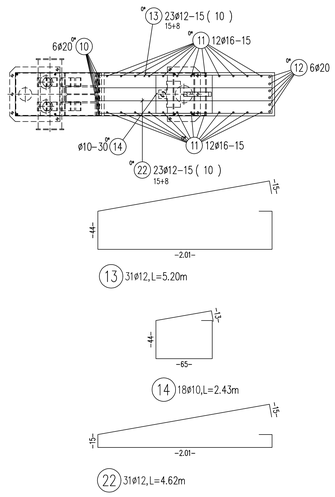

SECTION ANCHOR
M 1:25

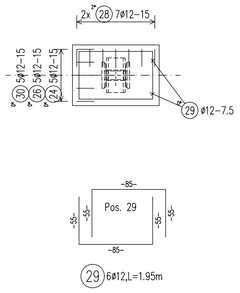

DIMENSIONS IN [cm, m]

±0.00 = 1888.88m (LEVEL OF UNLOADING)

- MAX. OCCURRING SOIL PRESSURE: 200KN/M2
- FOUNDATION MATERIAL NEEDS TO BE CHECKED BY AN ENGINEER
- DIMENSIONS TO BE CHECKED
- USE CHAMFERS FOR ALL CONCRETE EDGES ABOVE GROUND

CONCRETE
- MINIMUM COMPRESSIVE STRENGTH 32MPA
- FROST RESISTENT, MAX. PELLET SIZE: 32mm (SHAFT: 22mm)

STEEL
- RIBBED BARS, YIELD STRENGTH: TEMPCORE500+

- CONCRETE COVER TO RE-BARS: 50MM,BASE,,30MM,SHAFT

TOLERANCES
- HORIZ. LENGTH: ± 2.0 cm
- FOUNDATION LEVELS: ± 1.0 cm
- SURVEYED AXIS: ± 1.0 cm

REVISION:	DESCRIPTION:	DRAWN:	DATE:
	AENDBEZ	AENDERST	AENDDAT

DOPPELMAYR AUSTRALIA PTY LTD. 57 LEE AVENUE JINDABYNE NSW 2627
PH. 02 6456 2385, Email: info@doppelmayr.com.au

THIS DRAWING IS INTELLECTUAL PROPERTY OF DOPPELMAYR

PROJECT: GUTHRIES

PARTS: 2020-15 TOP STATION FOUNDATION REINFORCEMENT GUTHRIES

TYPE:

DRAWN: SHT
CHECKED:
RELEASED:
SCALE: NTS
PLAN-NR.: 2020-15-C-004
SIZE: BL
FILE:
DATE: 01/10/2020

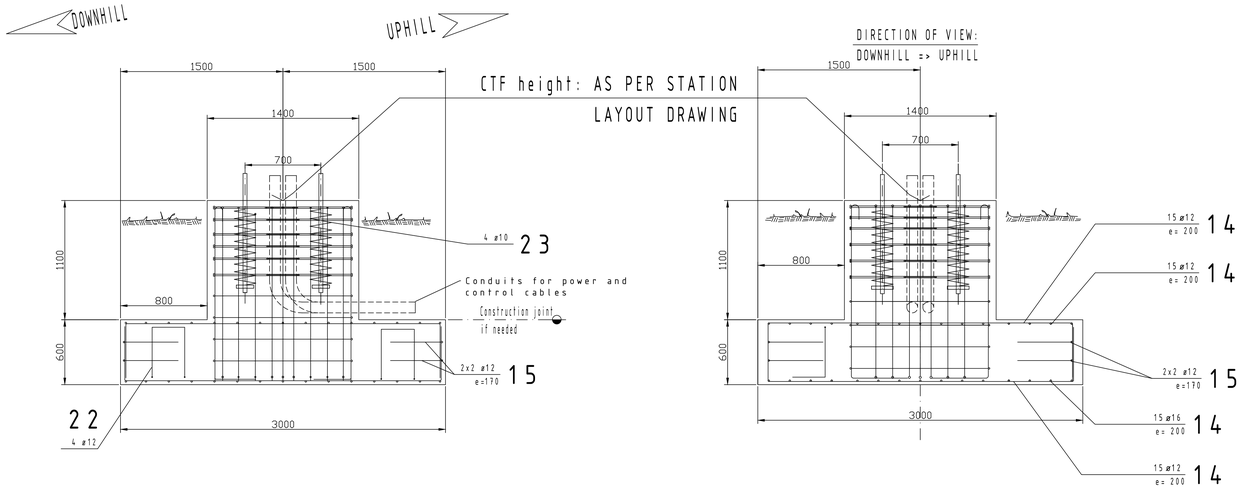

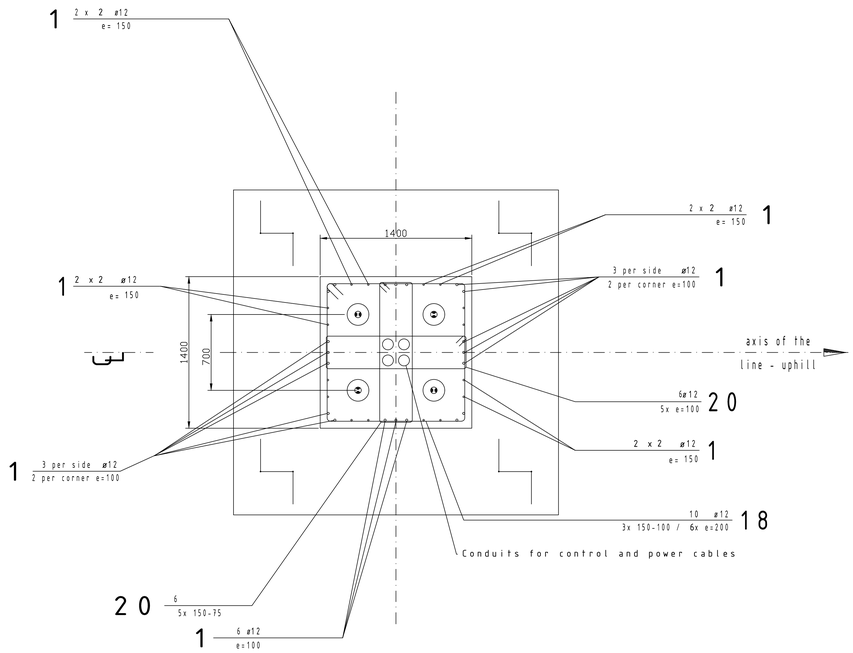

Shape	Item	Piece	ø[mm]	length	weight
200 1550 300	1	7	12	2.25 m	14 kg
450 2900 450	14	30	12	3.80m	104 kg
450 2850 450	15	8	12	3.80 m	28 kg
1300 150 300 1300 1300	18	10	12	5.50 m	50 kg
1300 150 300 1300	20	12	12	3.50 m	39 kg
450 700 450	22	4	12	1.60 m	6 kg
4 200 181+181	23	4	10	2.60 m	7 kg
TOTAL WEIGHT:				248 kg	

Instructions f. bending of hooks 90°:

Representation of bending form:

Intructions f. bending:

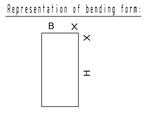

X...standard hook length
B...width of hook
H...height of hook

Design bent hooks as standard hooks

Instr. f. bending of struct. steel S50 as per ÖNORM EN1992-1-1, 8.3:

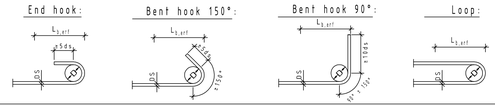

Bends, end hooks, bent hooks and loops on bars with: ds≤16mm.....D≥4ds
ds≥20mm.....D≥7ds

Bending up:

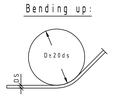

Hook addition:

Bending around a bar of at least the same thickness:

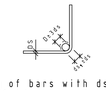

Sling:

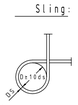

Bending of bars with ds</=12mm that enfold a bar of at least the same thickness.....D>/=3ds.

Australia

Concrete grade: N32 Min. cube compressive strength 28 days: 32 N/mm² frost-resistant, max. ag size 20mm

REINFORCEMENT: Ribbed concrete steel, yield point 500N/mm² - 500plus

In case of transversal ground slopes, use lean concrete down to frost-proof depth.

MAXIM. EXISTING CONTACT PRESSURE: 100 kN/m²

In case of inadequate or difficult soil conditions, e.g clay or sliding ground, a specialist for soil mechanics is to be consulted. Leave construction joint surfaces and inner surfaces rough

All elevations have to be checked on site!
Minimum concrete cover 50mm base and 32mm columns
All exposed corners to have a 20mmx20mm chamfer
All dimensions in mm do not scale.

Remarks:

The company executing the works is obliged to point out any inconsistencies between this drawing, the architect's drawings or drawings of other expert engineers resp. the local conditions on the constructions site.

ATTENTION:

A suitably experienced and qualified engineer is required to inspect the foundation material during construction and verify that an allowable bearing pressure of not less than 100kN/m² is achieved.

This drawing is to be read in conjunction with the operator room layout drawing and is only valid for a maximum shaft length of 1500mm supporting an operator room of 3.25x3.0m. Two foundations can be used for an operator room of 3.25x6.0m

IMPORTANT:

The drawing is only schematic!

Only the dimensions are applicable!

Vcolumn= 2.2 m³
Vbase= 5.4 m³

Vtotal=7.6 m³

IMPORTANT-Take into account the geotechnical engineering assessment when executing the construction works of the foundation!

ENSURE FOUNDATION HAS EARTH BONDING

The foundation must be completely back-filled in equal layers on the entire surface below the CTF height.
The backfill load was considered in the calculation. - specific weight 16 kN/m³.

DISTANCE CTF TO GROUND: 150 mm

If the weight of backfill cannot be carried out in the hereby specified size, the load must be applied in a different way (e.g. concrete load)

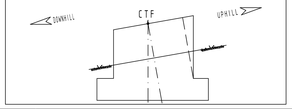

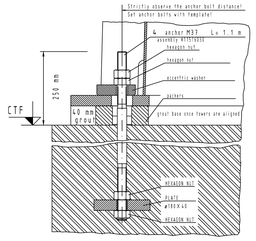

IMPORTANT

The anchors must be imbedded in concrete exactly parallel to each other and at right angle to the top foundation. Anchor bolts must NOT be welded nor tacked (risk of fracture).

After tower GROUTING, pre-tension anchor bolts hydraulically:

anchor M37 - 250 kN

4 anchor M37 delivery Doppelmayr
+ template for concrete work

Left Installation 0deg INCLINATION

The foundations must be surveyed in terrain exactly according to the specified CTF heights and lengths.
CTF length: ± 50 mm, CTF HEIGHT: ± 30 mm, Cross width: ± 20 mm, angle: ± 0.5°.
N.B.: The foundation dimensions are absolute minimum requirements!

Index	Revision	Date	Name	Configuration	CD NO
			G-Elves	0	

Doppelmayr® Innova Pytrol GmbH, Richenbachstraße 8-12, A-6850 WOLFURT/AUSTRIA

Scale 1:20 | Drawn 18/11/2020 | Date | Name | Approved | Checked | Author: W.KNÖPFLER | SAVED

Installation: OPERATOR ROOM FOUNDATION
Order: 2020-15 Piece: X
Gross weight: kg
Plot remark: =Plotart=
Partlist

OPERATOR ROOM FOUNDATION
OPERATOR ROOM SIZE 3.25X3.0m

Original drawing no. CD NO.
Objective No. 2020-15-C-012 Index A

This drawing is intellectual property of DOPPELMAYR Australia pty ltd and must not be copied nor utilized in whole or in part without permission and is subject to return upon request.

A0

1–2 excavator movements + Side/side ATV

Excavation/Laydown area

Guthega Skink Location 4m diameter

Drawing Title:	Drawn:	Date:	Scale:	Third Angle Projection
GUTHRIES_LAYOUT	DAMIAN	15.03.2021		
	Checked: SHAUN	Date: 15.03.2021	Material:	
	Approved: APPROVED_BY	Date: APPROVED_DATE	Finish:	

Project:	Sub Project:	Project No–Drawing No:	Sheet:	Revision:
GUTHRIES	LAYOUT_ACCESS	2020–15–C–013	of	B

File: FILENAME

All dimensions in millimeters. DO NOT SCALE. If in doubt ask.

Doppelmayr

Doppelmayr Australia Pty Ltd.
57 Lee Avenue, Leesville Estate
Jindabyne NSW 2627
Australia
ABN: 12 005 054 133

Phone: +61 2 6456 2385
Fax: +61 2 6456 2736
Web: www.doppelmayr.com
Email: info@doppelmayr.com.au

Customer: CHARLOTTE_PASS

This drawing is the intellectual property of DOPPELMAYR AUSTRALIA Pty Ltd and must not be copied or utilised in whole or in part without permission and is subject to return upon request. Copyright © of DOPPELMAYR AUSTRALIA Pty Ltd. All rights reserved.

A3

ROCK WALL NOTES

1. Strip topsoil and excavate to a suitable subgrade in a series of horizontal steps to suit base key rocks and fill.
2. Foundation material to be approved by engineer prior to construction.
3. Where the surface slope of retained material is between 10:1 (H:V) and 4:1 (H:V) the wall base dimension is to be increased by 0.5 meters.
4. Rock is to be sound durable granite or other approved material and at least 0.4m square meters plan area.
5. A continuous 90mm dia. socked drainage line is to be installed a the rear of the wall and drained freely
6. Rocks shall be placed in a horizontal manner that they are stable and interlocking and laid roughly coursed and bedded on their broadest base.
7. All material for fill shall be clean, free of organic matter and have a particle size not greater than 75mm.
8. Fill shall be compacted in 250mm thick loose layers using mechanical compaction.
9. Surface drainage should be provided around the uphill side of structures to prevent water pooling.

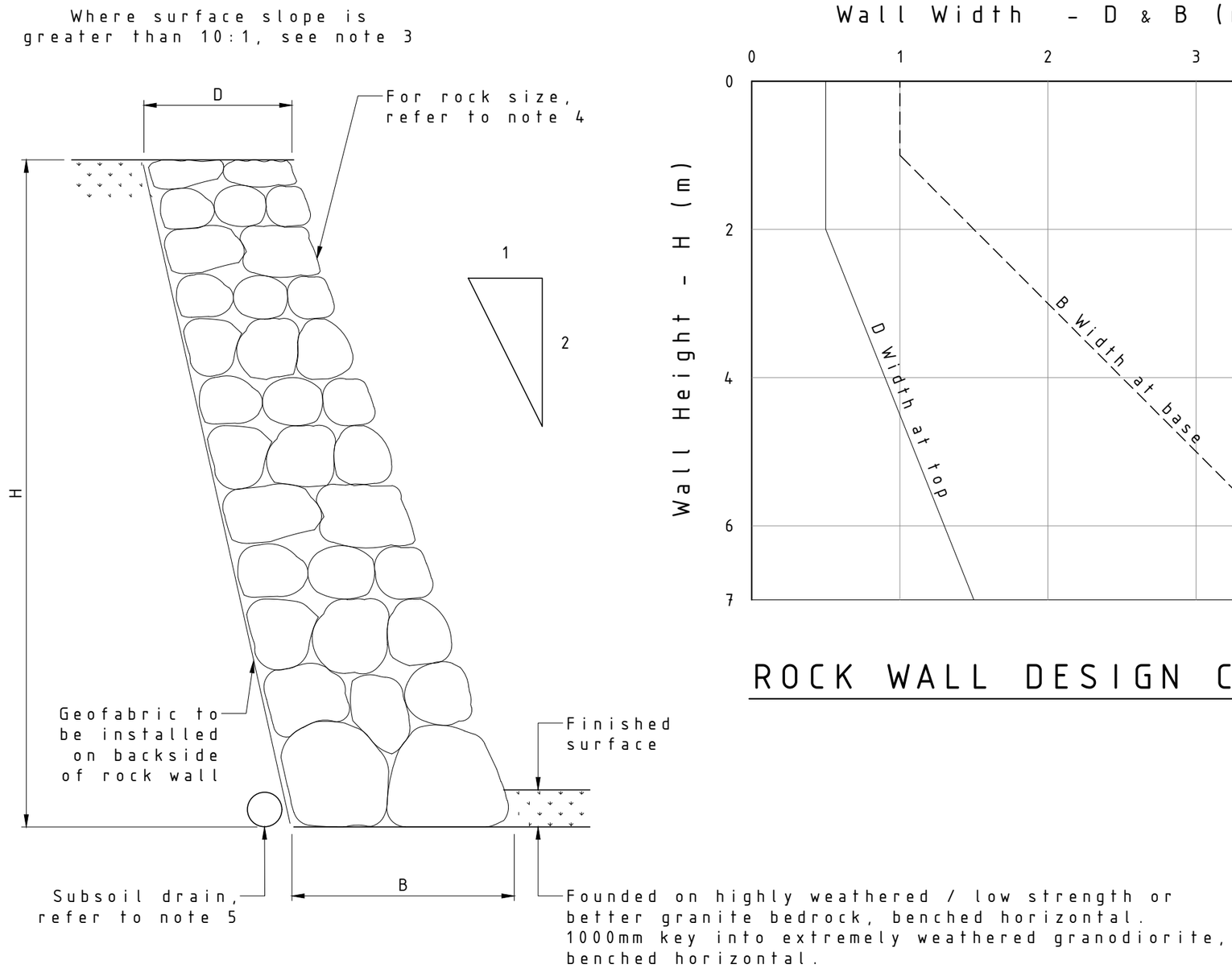

TYPICAL ROCK WALL GEOMETRY

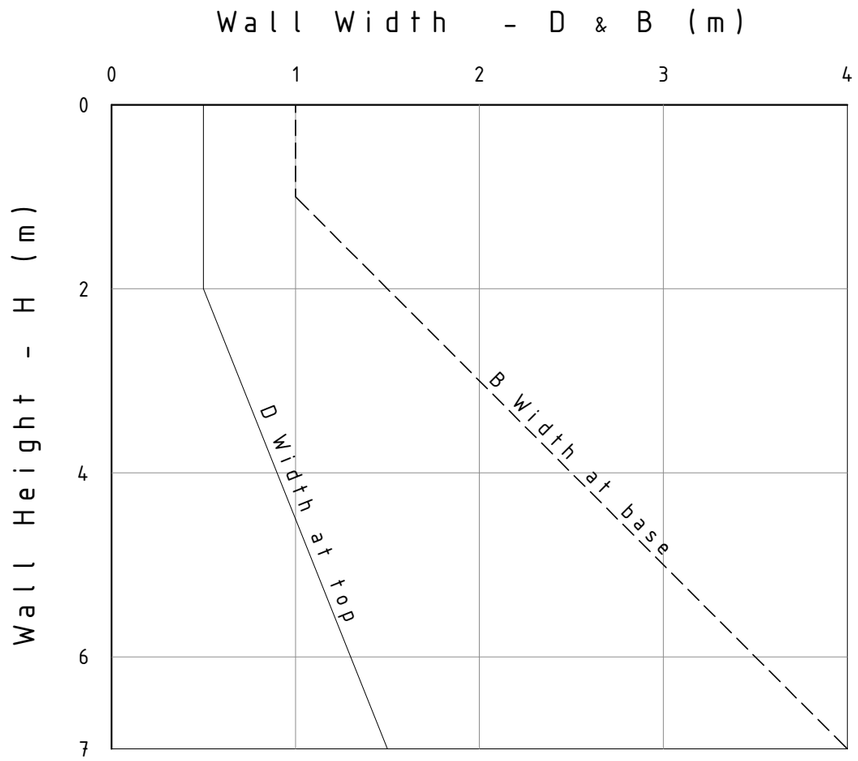

ROCK WALL DESIGN CHART

REVISION HISTORY				
REV	DESCRIPTION	DATE	DRAWN	APPROVED
A	First issue	16-Mar-2021	Damian	Shaun

Drawing Title: Rock Retaining Wall Standard Notes	Drawn: Damian	Date: 16-Mar-2021	Scale: Not To Scale	Third Angle Projection
	Checked: Shaun	Date: 16-Mar-2021	Material: N/A	
	Approved: Shaun	Date: 16-Mar-2021	Finish: N/A	
Project: Guthries	Sub Project: 2-CLF	Project No-Drawing No: 2020-15-C-014	Sheet: 1 of 1	Revision: A
File: Z:\Projects\Charlotte Pass\Guthries\Drawings\2020-15-C-014.dwg		All dimensions in millimeters. DO NOT SCALE. If in doubt ask.		

Doppelmayr
Doppelmayr Australia Pty Ltd.
57 Lee Avenue, Leesville Estate
Jindabyne NSW 2627 Australia
ABN: 12 005 054 133
Phone: +61 2 6456 2385
Fax: +61 2 6456 2736
Web: www.doppelmayr.com
Email: info@doppelmayr.com.au

Customer: Charlotte Pass

This drawing is the intellectual property of DOPPELMAYR AUSTRALIA Pty Ltd and must not be copied or utilised in whole or in part without permission and is subject to return upon request. Copyright © of DOPPELMAYR AUSTRALIA Pty Ltd. All rights reserved.

A3